

FLEETX®

HUB & DRUM ASSEMBLY

HEAVY-DUTY WHEEL-END COMPONENT CATALOGUE

Ductile Iron Hubs · Cast Spoke Wheels · ABS-Ready Drums · Full SAE Spindle Range

SAE J694 / J1671 | **ASTM** A-536 / A-159 | MADE FOR CANADIAN FLEETS

CONTENTS

INSIDE THIS CATALOGUE

INTRODUCTION

01	Product Overview & Part Numbering System	Guide	01
02	Icon Legend & Material Properties	Reference	02
03	2023 Series Assemblies	Series 2023	03
04	2033 Series Assemblies	Series 2033	04
05	1051 Series Assemblies	Series 1051	05
06	2027 Series Assemblies	Series 2027	06
07	2323 Series Assemblies	Series 2323	07
08	2343 Series Assemblies	Series 2343	08
09	2520 Series Assemblies	Series 2520	09
10	2433 Series Assemblies	Series 2433	10
11	2431 Series Assemblies	Series 2431	11
12	2401 Series Assemblies	Series 2401	12
13	7000 Series Assemblies — 3-Spoke 15"	Series 7000	13
14	7000 Series Assemblies — 5-Spoke 20"	Series 7000	14

COMPANY & PRODUCT OVERVIEW

PRECISION-ENGINEERED WHEEL-END SOLUTIONS

Ductile iron hub & drum assemblies built for the demands of North American heavy-duty fleets.

FleetX cast-iron hub and drum assemblies are engineered for multiple heavy-duty applications using the latest manufacturing technology. The ductile-iron hub is a low-maintenance design that delivers superior strength, performance and durability across every duty cycle.

Ready for ABS

Includes bearing cup & ABS tone ring covering all standard applications & spindle sizes

SAE J694 / J1671

Fully compliant hub & drum specification for heavy-duty axle systems

Corrosion Resistant

ABS tone rings are powdered metal, chromate-plated for long service life

PART NUMBERING SYSTEM

BEARING COMBINATION

NO.	SAE	OUTER	INNER
F01	N	HM212011	HM218210
F02	P	HM518410	HM518410
F03	FF / FG	3720	HM212011
F04	FC / FD	3525	39520
F05	FL	552A	6420
F06	K30 / A26	742	752
F07	A45	6535	772
F08	C22 / ROR	Y33213	HM218210
F09	L-Series	39520	47620
F10	R-Series	572	592A
F11	FC	25820	JM207010

SUFFIX / FEATURE CODE — HUB SERIES 2023

SUFFIX	DESCRIPTION	APPLICATION
B	Balanced Assembly (assemblies only)	Disc / Spk
D	Disposable Shipping Nut	Disc
F	Fill Port with SAE Plug	Disc / Spk
G	Bearing Cones Included	Disc / Spk
H	Rim Clamps, Nuts & Spacer Band	Spoke
K	Rim Clamps, Nuts Only	Spoke
L	Studs for Aluminum Wheels	Disc
N	Fasteners Installed	Disc
R	Recessed Shipping Nut	Disc
T	ABS Tone Ring	Disc / Spk
X	Extra-Long Studs	Disc

F01-20231LTN

"N" spindle config. — 2023 Series hub casting w/ 4.79" M22 studs, tone ring, 10 ea. 22mm flange nuts installed, assembled w/ drum.

F02-56807H

"P" spindle config. — 56807 Series spoke wheel casting w/ rim clamps, nuts & spacer band, assembled w/ drum.

Interchange and competitor design information is based on the best information available at the time of publication and is to be used as a guide only. Although every care has been taken to ensure the accuracy of these interchanges, Techlink Industries Corporation does not assume liability for errors, changes or omissions, or for harm resulting therefrom. It is recommended that all parts be thoroughly checked for proper form, fit and function prior to installation to determine interchangeability.

REFERENCE & COMPLIANCE

ICON LEGEND & MATERIAL PROPERTIES

How to read the assembly icons used throughout this catalogue, plus the material specifications every FleetX casting meets.

ICON LEGEND


Available with Stud-Piloted (Ball Seat) mounting


Available with Hub-Piloted (Unimount) mounting


Cast spoke wheel assembly


ABS-Ready — machined for ABS tone ring


Available with balanced drum (20 in.-oz. standard)


Hub and rotor assembly

DUCTILE & GRAY IRON PROPERTIES

FleetX Hubs & Cast-Spoke Wheels

ASTM A-536 (Grade 65-45-12) — Standard Specification for Ductile Iron Castings

ASTM E-8 — Methods of Tension Testing of Metallic Materials

SAE J434 (Grade 64-45-12) — Automotive Ductile (Nodular) Iron Castings

FleetX Standard Brake Drums

ASTM A-159 (Grade G3500b) — Standard Specification for Automotive Gray Cast Iron

SAE J431 (G11H20b) — Automotive Gray Iron Castings

FleetX 67xxx Brake Drums

ASTM A-159 (Grade G3000b) — Standard Specification for Automotive Gray Cast Iron

SAE J431 (G11H18b) — Automotive Gray Iron Castings

Material Property Testing Governed By

ASTM A-48 — Standard Tensile Specifications for Gray Iron Castings

ASTM E-8 — Standard Test Methods for Tension Testing

ASTM E-10 — Hardness Testing Procedure

ASTM A-247 — Microstructure Evaluation Procedure

Every effort has been made to ensure the information contained in this catalogue is correct and up to date at the time of publication.

WHEEL-END PRODUCT LINE

2023 SERIES ASSEMBLIES

Ductile Iron 10 Stud Hub w/ 11.25" Dia. Bolt Circle — Uses Outboard Drum, Serrated Stud

SAE "N" SPINDLE CONFIG.

BEARING CUP / CONE

Inner Bearing Cup / Cone	HM218210 / HM218248
Outer Bearing Cup / Cone	HM212011 / HM212049

HUB SPECIFICATIONS

Std. Hub Weight	42 lbs.
A – Hub Overall Length	7.06"
B – Inner Cup to Mounting Face	4.87"
C – Distance Between Cups	3.34"
D – Tone Ring Bore Diameter	6.50"
E – Tone Ring Bore Depth	0.43"
J – Bolt Circle	11.25"
K – Bolt Pattern	6 Holes 5/16"-18 UNC, 5.50" B.C.

REFERENCE DIAGRAM

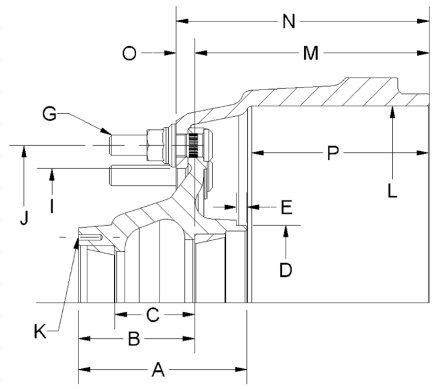

AVAILABLE PART NUMBERS

FLEETX PN	WEBB PN	DESCRIPTION	DRUM PN	STUD THREAD	SAE
F01-20231S	20231UQ3	Hub Pilot, 10 – M22 × 3.97 Stud, 16.5 × 7 Drum	672448B	M22 X 1.5	N
F01-20231L	20231UQ5	Hub Pilot, 10 – M22 × 4.82 Stud, 16.5 × 7 Drum	672448B	M22 X 1.5	N
F01-20231SMR	20231UQMR	Hub Pilot, 10 – 3/4-16 RH Stud, 16.5 × 7 Drum	672448B	3/4-16 RH	N
F01-20231LMR	20231UQMR	Hub Pilot, 10 – 3/4-16 RH Stud, 16.5 × 7 Drum	672448B	3/4-16 RH	N
F01-20231SML	20231UQML	Hub Pilot, 10 – 3/4-16 LH Stud, 16.5 × 7 Drum	672448B	3/4-16 LH	N
F01-20231LMR	20231UQML	Hub Pilot, 10 – 3/4-16 LH Stud, 16.5 × 7 Drum	672448B	3/4-16 LH	N

Option T **ABS Tone Ring** — 100-Tooth Tone Ring — Powdered Metal • Pitch Diameter **6.77"**

WHEEL-END PRODUCT LINE

2033 SERIES ASSEMBLIES

Ductile Iron 10 Stud Hub w/ 335mm Dia. Bolt Circle — Uses Outboard Drum, Serrated Stud

SAE "N" SPINDLE CONFIG.

BEARING CUP / CONE

Inner Bearing Cup / Cone	HM218210 / HM218248
Outer Bearing Cup / Cone	HM212011 / HM212049

HUB SPECIFICATIONS

Std. Hub Weight	59 lbs.
A – Hub Overall Length	7.06"
B – Inner Cup to Mounting Face	4.87"
C – Distance Between Cups	3.35"
D – Tone Ring Bore Diameter	6.50"
E – Tone Ring Bore Depth	0.44"
J – Bolt Circle	335mm (13.19")
K – Bolt Pattern	6 Holes 5/16"-18 UNC, 5.50" B.C.

REFERENCE DIAGRAM

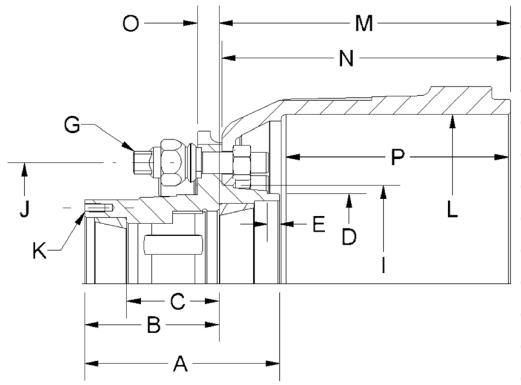

AVAILABLE PART NUMBERS

FLEETX PN	WEBB PN	DESCRIPTION	DRUM PN	STUD THREAD	SAE
F01-20331SFJ	20331FJ3	Hub Pilot, 10 – M22 × 3.97 Stud, 16.5 × 7 Drum	673464B	M22 X 1.5	N
F01-20331LFJ	20331FJ5	Hub Pilot, 10 – M22 × 4.82 Stud, 16.5 × 7 Drum	673464B	M22 X 1.5	N

Option T **ABS Tone Ring** — 100-Tooth Tone Ring — Powdered Metal • Pitch Diameter **6.77"**

WHEEL-END PRODUCT LINE

1051 SERIES ASSEMBLIES

Ductile Iron 10 Stud Hub w/ 8.75" Dia. Bolt Circle — Uses Outboard Drum, Serrated Stud

SAE "N" SPINDLE CONFIG.

BEARING CUP / CONE

Inner Bearing Cup / Cone	HM218210 / HM218248
Outer Bearing Cup / Cone	HM212011 / HM212049

HUB SPECIFICATIONS

Std. Hub Weight	44 lbs.
A – Hub Overall Length	7.06"
B – Inner Cup to Mounting Face	4.86"
C – Distance Between Cups	3.34"
D – Tone Ring Bore Diameter	6.39"
E – Tone Ring Bore Depth	0.32"
J – Bolt Circle	8.75"
K – Bolt Pattern	6 Holes 5/16"-18 UNC, 5.50" B.C.

REFERENCE DIAGRAM

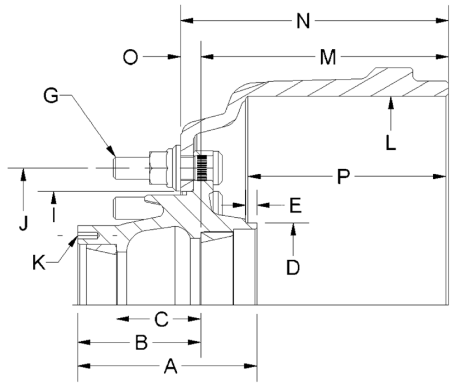

AVAILABLE PART NUMBERS

FLEETX PN	WEBB PN	DESCRIPTION	DRUM PN	STUD THREAD	SAE
F01-10519CLML	10519CLML	Hub Pilot, 10 – 3/4-16 RH Stud, 12.25 × 7.5 Drum	673457F	3/4-16 RH	N
F01-10519CLMR	10519CLMR	Hub Pilot, 10 – 3/4-16 RH Stud, 12.25 × 7.5 Drum	673457F	3/4-16 LH	N

Option T **ABS Tone Ring** — 80-Tooth Tone Ring — Powdered Metal • Pitch Diameter **6.77"**

WHEEL-END PRODUCT LINE

2027 SERIES ASSEMBLIES

Ductile Iron 8 Stud Hub w/ 275mm Dia. Bolt Circle — Uses Outboard Drum, Serrated Stud

SAE "N" SPINDLE CONFIG.

BEARING CUP / CONE

Inner Bearing Cup / Cone	HM218210 / HM218248
Outer Bearing Cup / Cone	HM212011 / HM212049

HUB SPECIFICATIONS

Std. Hub Weight	37 lbs.
A – Hub Overall Length	7.09"
B – Inner Cup to Mounting Face	4.87"
C – Distance Between Cups	3.34"
D – Tone Ring Bore Diameter	6.39"
E – Tone Ring Bore Depth	0.44"
J – Bolt Circle	275mm (10.83")
K – Bolt Pattern	6 Holes 5/16"-18 UNC, 5.50" B.C.

REFERENCE DIAGRAM

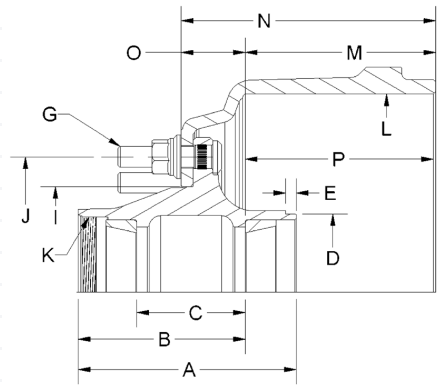

AVAILABLE PART NUMBERS

FLEETX PN	WEBB PN	DESCRIPTION	DRUM PN	STUD THREAD	SAE
F01-20271S	20271CW3	Hub Pilot, 8 – M22 × 3.97 Stud, 12.25 × 7.5 Drum	673460F	M22 X 1.5	N
F01-20271L	20271CW5	Hub Pilot, 8 – M22 × 4.82 Stud, 12.25 × 7.5 Drum	673460F	M22 X 1.5	N

Option T **ABS Tone Ring** — 80-Tooth Tone Ring — Powdered Metal • Pitch Diameter **6.77"**

WHEEL-END PRODUCT LINE

2323 SERIES ASSEMBLIES

Ductile Iron 10 Stud Hub w/ 11.25" Dia. Bolt Circle — Uses Outboard Drum, Serrated Stud

SAE "P" SPINDLE CONFIG.

BEARING CUP / CONE

Inner Bearing Cup / Cone	HM518410 / HM518445
Outer Bearing Cup / Cone	HM518410 / HM518445

HUB SPECIFICATIONS

Std. Hub Weight	64 lbs.
A – Hub Overall Length	9.06"
B – Inner Cup to Mounting Face	6.94"
C – Distance Between Cups	4.50"
D – Tone Ring Bore Diameter	6.50"
E – Tone Ring Bore Depth	0.44"
J – Bolt Circle	11.25"
K – Bolt Pattern	6.25 x 8 TPI Threaded

REFERENCE DIAGRAM

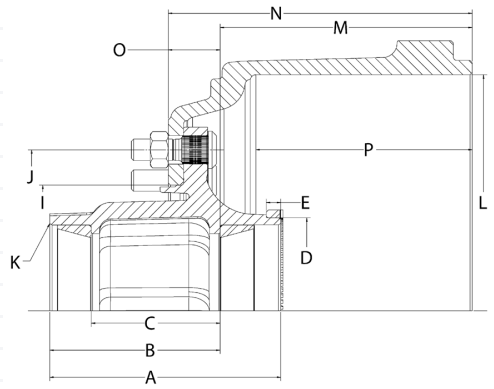

AVAILABLE PART NUMBERS

FLEETX PN	WEBB PN	DESCRIPTION	DRUM PN	STUD THREAD	SAE
F02-23231S	23231UQ3	Hub Pilot, 10 – M22 × 3.97 Stud, 16.5 × 7 Drum	672448B	M22 X 1.5	P
F02-23231L	23231UQ5	Hub Pilot, 10 – M22 × 4.82 Stud, 16.5 × 7 Drum	672448B	M22 X 1.5	P
F02-23231MR	23231UQMR	Hub Pilot, 10 – 3/4-16 RH Stud, 16.5 × 7 Drum	672448B	3/4-16 RH	P
F02-23231ML	23231UQML	Hub Pilot, 10 – 3/4-16 RH Stud, 16.5 × 7 Drum	672448B	3/4-16 LH	P

Option T **ABS Tone Ring** — 100-Tooth Tone Ring — Powdered Metal • Pitch Diameter **6.77"**

WHEEL-END PRODUCT LINE

2343 SERIES ASSEMBLIES

Ductile Iron 10 Stud Hub w/ 11.25" Dia. Bolt Circle — Uses Outboard Drum, Serrated Stud

SAE "P" SPINDLE CONFIG.

BEARING CUP / CONE

Inner Bearing Cup / Cone	HM518410 / HM518445
Outer Bearing Cup / Cone	HM518410 / HM518445

HUB SPECIFICATIONS

Std. Hub Weight	48 lbs.
A – Hub Overall Length	8.07"
B – Inner Cup to Mounting Face	5.95"
C – Distance Between Cups	4.50"
D – Tone Ring Bore Diameter	6.50"
E – Tone Ring Bore Depth	0.51"
J – Bolt Circle	11.25"
K – Bolt Pattern	6 Holes 5/16"-18 UNC, 5.50" B.C.

REFERENCE DIAGRAM

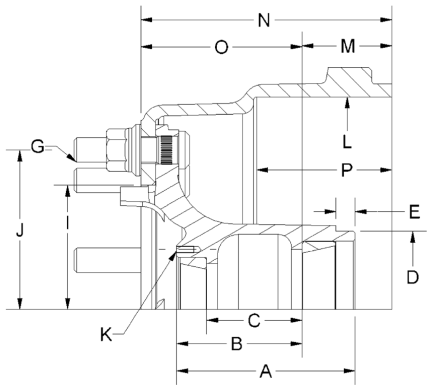

AVAILABLE PART NUMBERS

FLEETX PN	WEBB PN	DESCRIPTION	DRUM PN	STUD THREAD	SAE
F02-23431S	23431UQ3	Hub Pilot, 10 – M22 × 3.97 Stud, 16.5 × 7 Drum	672448B	M22 X 1.5	P
F02-23431L	23431UQ5	Hub Pilot, 10 – M22 × 4.82 Stud, 16.5 × 7 Drum	672448B	M22 X 1.5	P

Option T **ABS Tone Ring** — 100-Tooth Tone Ring — Powdered Metal • Pitch Diameter **6.77"**

WHEEL-END PRODUCT LINE

2520 SERIES ASSEMBLIES

Ductile Iron 10 Stud Hub w/ 11.25" Dia. Bolt Circle — Uses Outboard Drum, Serrated Stud

SAE "FF/FG" SPINDLE CONFIG.

BEARING CUP / CONE

Inner Bearing Cup / Cone	HM212011 / HM212049
Outer Bearing Cup / Cone	3720 / 3782

HUB SPECIFICATIONS

Std. Hub Weight	45 lbs.
A – Hub Overall Length	6.30"
B – Inner Cup to Mounting Face	4.43"
C – Distance Between Cups	3.37"
D – Tone Ring Bore Diameter	5.52"
E – Tone Ring Bore Depth	0.67"
J – Bolt Circle	11.25"
K – Bolt Pattern	6 Holes 5/16"-18 UNC, 4.50" B.C.

REFERENCE DIAGRAM

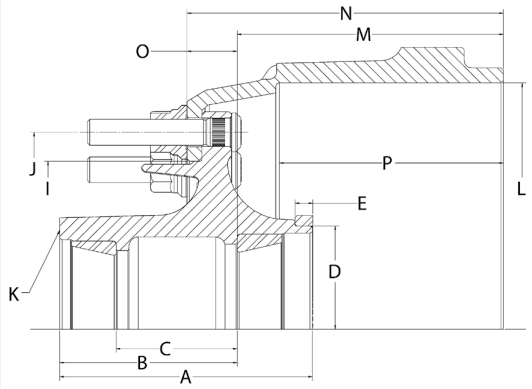

AVAILABLE PART NUMBERS

FLEETX PN	WEBB PN	DESCRIPTION	DRUM PN	STUD THREAD	SAE
F03-25201X	25201RX1	Hub Pilot, 10 – M22 × 3.70 Stud, 15 × 4 Drum	673460B	M22 X 1.5	FF/FG
F02-25201S	23431RX1	Hub Pilot, 10 – M22 × 3.97 Stud, 15 × 4 Drum	673460B	M22 X 1.5	FF/FG

Option T **ABS Tone Ring** — 100-Tooth Tone Ring — Powdered Metal • Pitch Diameter **6.46"**

WHEEL-END PRODUCT LINE

2433 SERIES ASSEMBLIES

Ductile Iron 10 Stud Hub w/ 335mm Dia. Bolt Circle — Uses Outboard Drum, Serrated Stud

SAE "FF/FG" SPINDLE CONFIG.

BEARING CUP / CONE

Inner Bearing Cup / Cone	752 / 759
Outer Bearing Cup / Cone	742 / 740

HUB SPECIFICATIONS

Std. Hub Weight	48 lbs.
A – Hub Overall Length	8.46"
B – Inner Cup to Mounting Face	5.94"
C – Distance Between Cups	4.06"
D – Tone Ring Bore Diameter	N/A
E – Tone Ring Bore Depth	N/A
J – Bolt Circle	335mm (13.19")
K – Bolt Pattern	6 Holes 5/16"-18 UNC, 6.75" B.C.

REFERENCE DIAGRAM

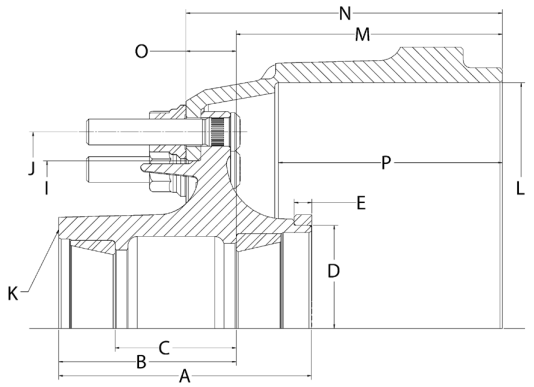

AVAILABLE PART NUMBERS

FLEETX PN	WEBB PN	DESCRIPTION	DRUM PN	STUD THREAD	SAE
F06-24331S	24331FK3	Hub Pilot, 10 – M22 × 3.97 Stud, 16.5 × 8-5/8 Drum	672458F	M22 X 1.5	K30
F06-24331L	24331FK5	Hub Pilot, 10 – M22 × 4.82 Stud, 16.5 × 8-5/8 Drum	672458F	M22 X 1.5	K30

Option T **ABS Tone Ring** — 100-Tooth Tone Ring — Powdered Metal • Pitch Diameter **7.28"**

WHEEL-END PRODUCT LINE

2431 SERIES ASSEMBLIES

Ductile Iron 10 Stud Hub w/ 335mm Dia. Bolt Circle — Uses Outboard Drum, Serrated Stud

SAE "K30" SPINDLE CONFIG.

BEARING CUP / CONE

Inner Bearing Cup / Cone	752 / 759
Outer Bearing Cup / Cone	742 / 740

HUB SPECIFICATIONS

Std. Hub Weight	48 lbs.
A – Hub Overall Length	8.46"
B – Inner Cup to Mounting Face	5.94"
C – Distance Between Cups	4.06"
D – Tone Ring Bore Diameter	N/A
E – Tone Ring Bore Depth	N/A
J – Bolt Circle	335mm (13.19")
K – Bolt Pattern	6 Holes 5/16"-18 UNC, 6.75" B.C.

REFERENCE DIAGRAM

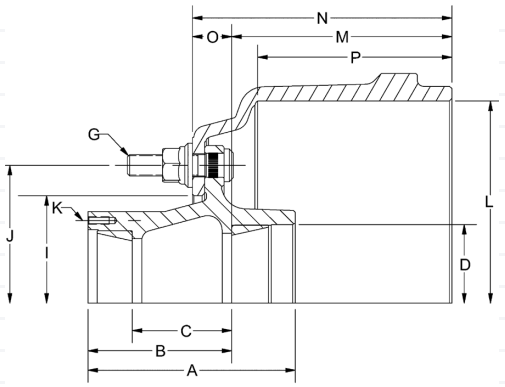

AVAILABLE PART NUMBERS

FLEETX PN	WEBB PN	DESCRIPTION	DRUM PN	STUD THREAD	SAE
F06-24311S	24311FJ3	Hub Pilot, 10 – M22 × 3.97 Stud, 16.5 × 7 Drum	673464B	M22 X 1.5	K30
F06-24311L	24311FJ5	Hub Pilot, 10 – M22 × 4.82 Stud, 16.5 × 7 Drum	673464B	M22 X 1.5	K30

Option T **ABS Tone Ring** — 100-Tooth Tone Ring — Powdered Metal • Pitch Diameter **7.28"**

WHEEL-END PRODUCT LINE

2401 SERIES ASSEMBLIES

Ductile Iron 10 Stud Hub w/ 11.25" Dia. Bolt Circle — Uses Outboard Drum, Serrated Stud

SAE "K30" SPINDLE CONFIG.

BEARING CUP / CONE

Inner Bearing Cup / Cone	752 / 759
Outer Bearing Cup / Cone	742 / 740

HUB SPECIFICATIONS

Std. Hub Weight	23 lbs.
A – Hub Overall Length	8.47"
B – Inner Cup to Mounting Face	5.95"
C – Distance Between Cups	4.06"
D – Tone Ring Bore Diameter	N/A
E – Tone Ring Bore Depth	N/A
J – Bolt Circle	11.25"
K – Bolt Pattern	6 Holes 5/16"-18 UNC, 6.75" B.C.

REFERENCE DIAGRAM

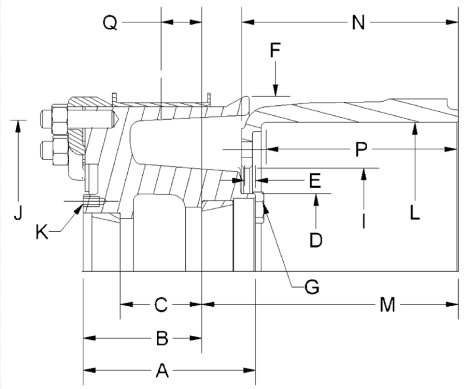

AVAILABLE PART NUMBERS

FLEETX PN	WEBB PN	DESCRIPTION	DRUM PN	STUD THREAD	SAE
F06-24011S	24011UH4	Hub Pilot, 10 – M22 × 3.97 Stud, 16.5 × 7 Drum	672448B	M22 X 1.5	K30
F06-24011L	24011UH4	Hub Pilot, 10 – M22 × 4.82 Stud, 16.5 × 7 Drum	672448B	M22 X 1.5	K30

Option T **ABS Tone Ring** — 100-Tooth Tone Ring — Powdered Metal • Pitch Diameter **7.28"**

WHEEL-END PRODUCT LINE

7000 SERIES ASSEMBLIES — 3-SPOKE 15"

Ductile Iron 3-Spoke 15" Wheel Assembly — Cast Spoke Configuration

SAE "N" SPINDLE CONFIG.

BEARING CUP / CONE

Inner Bearing Cup / Cone	HM218210 / HM218248
Outer Bearing Cup / Cone	HM212011 / HM212049

HUB SPECIFICATIONS

Std. Hub Weight	97 lbs.
A – Hub Overall Length	6.97"
B – Inner Cup to Mounting Face	4.87"
C – Distance Between Cups	3.34"
D – Tone Ring Bore Diameter	6.39"
E – Tone Ring Bore Depth	0.45"
J – Bolt Circle	12.50"
K – Bolt Pattern	6 Holes 5/16"-18 UNC, 5.50" B.C.

REFERENCE DIAGRAM

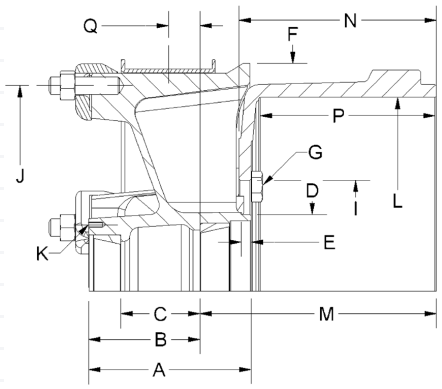

AVAILABLE PART NUMBERS

FLEETX PN	WEBB PN	DESCRIPTION	DRUM PN	STUD THREAD	SAE
F01-70159	70159CKH	3-Spoke x 15" Wheel, 12.25 × 7.5 Drum	672617F	N/A	N

Option T **ABS Tone Ring** — 80-Tooth Tone Ring — Powdered Metal • Pitch Diameter **6.77"**

WHEEL-END PRODUCT LINE

7000 SERIES ASSEMBLIES — 5-SPOKE 20″

Ductile Iron 5-Spoke 20" Wheel Assembly — Cast Spoke Configuration

SAE "N" SPINDLE CONFIG.

BEARING CUP / CONE

Inner Bearing Cup / Cone	HM218210 / HM218248
Outer Bearing Cup / Cone	HM212011 / HM212049

HUB SPECIFICATIONS

Std. Hub Weight	81 lbs.
A – Hub Overall Length	6.93″
B – Inner Cup to Mounting Face	4.74″
C – Distance Between Cups	3.34″
D – Tone Ring Bore Diameter	6.50″
E – Tone Ring Bore Depth	0.44″
J – Bolt Circle	17.50″
K – Bolt Pattern	6 Holes 5/16"-18 UNC, 5.50" B.C.

REFERENCE DIAGRAM

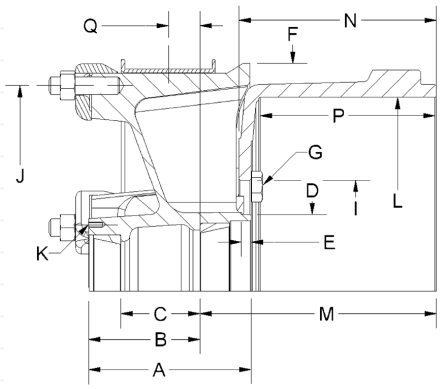

AVAILABLE PART NUMBERS

FLEETX PN	WEBB PN	DESCRIPTION	DRUM PN	STUD THREAD	SAE
F01-75209	75209GCH	5-Spoke x 20″ Wheel, 16 × 7 Drum	672518F	N/A	N

Option T **ABS Tone Ring** — 100-Tooth Tone Ring — Powdered Metal • Pitch Diameter **6.77"**

FLEETX®

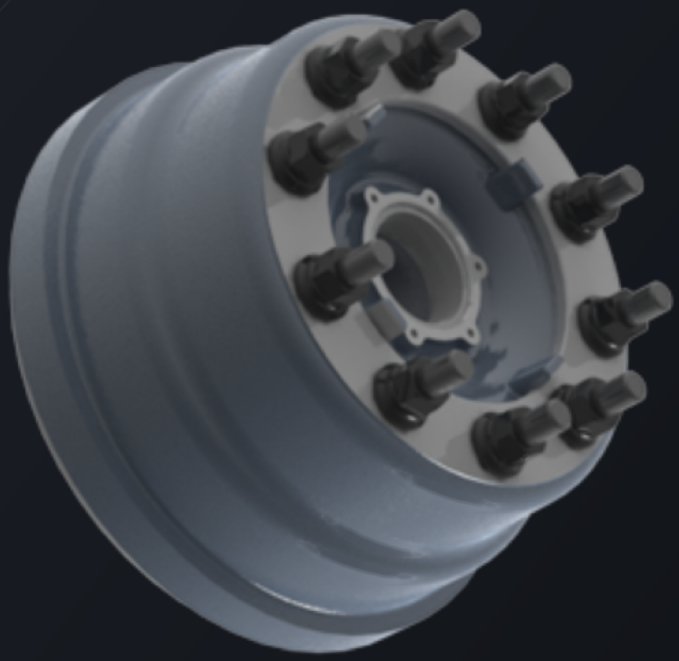

BUILT TO KEEP YOUR FLEET ROLLING

Thank you for choosing FleetX heavy-duty wheel-end components

www.fleetxparts.com

sales@fleetxparts.com

+1-905-737-4060

TECHLINK INDUSTRIES CORPORATION

MANUFACTURER & DISTRIBUTOR OF FLEETX® WHEEL-END PRODUCTS

© TECHLINK INDUSTRIES CORPORATION · FLEETX® IS A REGISTERED TRADEMARK · ALL RIGHTS RESERVED