FLEETX®

PREMIUM HEAVY DUTY PARTS

BRAKE SHOES

& FRICTION MATERIAL KITS

PRODUCT CATALOGUE

BUILT FOR STRENGTH.
ENGINEERED TO LAST.

PRECISION ENGINEERED
FOR PERFECT FIT.

OEM QUALITY.
TRUSTED PERFORMANCE.



Techlink
INDUSTRIES CORPORATION

FleetX Friction Material are an Individual Proprietary Formulation; manufactured with the most advanced OEM Technologies and Processes to exceed industries standards and FMVSS121 requirements.
All our Friction meets and exceed the FMVSS121 standards/requirements. All Friction are ECE R90 Approved.

FLX101-I / FLX101-A – STANDARD
FF 20,000 LBS. GAWR / 165 AL

FLX101 is a standard block with safe stopping power. It is the most popular block with budget minded fleet owners. It is the economical solution to a long-haul applications. It has excellent wear characteristics, which give you the lowest cost per mile in its class. It has stable performance for normal duty cycles, conditions and loads.

FLX108-I / FLX108-A – PREMIUM
20,000 LBS. GAWR / 165 AL. Flexural Strength: 5700-6200 lbs/sq in.

FLX08 is a premium block up to 20,000 lbs axle load. It is preferred by customers demand the best. It ensures good performance for both the highway and mountain terrain.

FLX102-I / FLX102-A – STANDARD
FF 23,000 LBS. GAWR / 165 AL

FLX102 is high quality block with safe stopping power. It is uniquely suite for long haul, intercity and general freight applications. It has excellent heat stability and is gentle to the mating surface. It has consistent performance over wide range of duty of duty cycles. Its low swell characteristic makes it ideally suited to automatic slack adjusters.

FLX107-I / FLX107-A – PREMIUN
FF 23,000 LBS. GAWR / 165 AL

FLX107 is high quality block with safe stopping power. It is uniquely suite for long haul, intercity and general freight applications. It has excellent heat stability and is gentle to the mating surface. It has consistent performance over wide range of duty of duty cycles. Its low swell characteristic makes it ideally suited to automatic slack adjusters.

FLX185-I / FLX185-A – PREMIUM

GC 23,000 LBS. GAWR / 165 AL. Flexural Strength: 6000 lbs/sq in.

FLX85 is premium non-asbestos quality material. It has exceptional lining life and excellent flexural strength. It has good fade, recovery and retardation. It has smooth judder free braking and is gentle to the drum. It can be used in medium to severe duty applications. Application: Heavy Duty Tractors, Trailers, Trucks, and Transit Buses.

FLX307-1 / FLX307-A – SEMI METALLIC

FF 25,000 LBS. GAWR / 165 AL

FLX307 is a premium semi metallic quality with high structural integrity. It is designed to meet the demanding brake requirements of severe service truck operations. Severe hauling in mountain terrain, refuse collecting trucks with severest duty cycle are the stopping power with assured safety.

FLX1707-I / FLX1707-A – EXTREME

FF 26,000 LBS. GAWR / 180 AL

FLX1707 is a premium heavy-duty block designed especially for buses, refuse and transit application where large numbers of stops need at regular frequency which tends to generate high temperatures. It has low noise and longer service life that reduces maintenance costs. Application: Transit, Coach, School Buses. Refuse, Waste Disposal vanes. Fire, Rescue, Emergency Trucks.

PARTS NUMBERING SYSTEM

The FleetX parts numbering system is set up systematically:

EXAMPLE

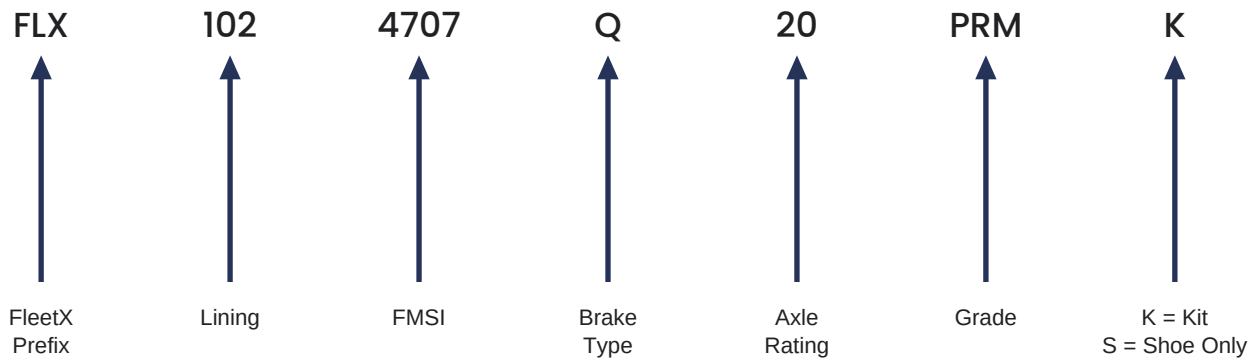

Reading the code

Example: FLX 102 4707 Q 20 PRM K reads as FleetX-prefixed, FLX102 lining, FMSI 4707, Meritor Q brake type, 20,000 lb axle rating, Premium grade, supplied as a kit.

RECOMMENDED FOR S-CAM BRAKES



TANDEM TRACTOR/TRAILER



SPREAD TANDEM



MULTIPLE TRAILER



SINGLE TRACTOR/TRAILER



STRAIGHT TRUCK



CONTAINER CHASSIS



LIVESTOCK TRAILER



CAR HAULER



DRY BULK



TANKER



FLAT BED TRAILER



VAN TRAILER



LOGGING TRAILER



SINGLE AXLE DUMP



TANDEM AXLE DUMP



REFUSE TRUCK



TANDEM AXEL MIXER



SCHOOL BUS



FIRE TRUCK



TRI-AXLE DUMP TRAILER

NEW LINED BRAKE SHOE & HARDWARE KIT

APPLICATION: MERITOR Q

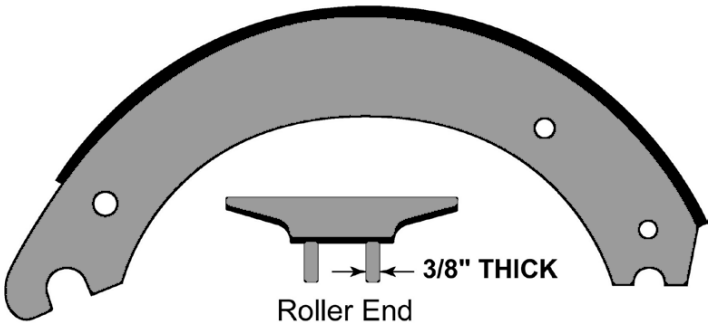

FMSI	BRAKE TYPE	FLEETX FRICTION	NEW LINED BRAKE SHOE KIT NUMBER	HARDWARE KIT #	DIAMETER	WIDTH
4707	Q	FLX101-I FLX101-A FLX108-I FLX108-A FLX102-I FLX102-A FLX107-I FLX107-A FLX185-I FLX185-A FLX307-I FLX307-A	FLX101-I 4707Q 20K STD HK FLX101-A 4707Q 20K STD HK FLX108-I 4707Q 20K PRM HK FLX108-A 4707Q 20K PRM HK FLX102-I 4707Q 23K STD HK FLX102-A 4707Q 23K STD HK FLX107-I 4707Q 23K PRM HK FLX107-A 4707Q 23K PRM HK FLX185-I 4707Q 23K PRM HK FLX185-A 4707Q 23K PRM HK FLX307-1 4707Q 25K PRM HK FLX307-A 4707Q 25K PRM HK	FLX4707QHK	16.1/2”	7”

NEW LINED BRAKE SHOE & HARDWARE KIT

APPLICATION: MERITOR Q PLUS

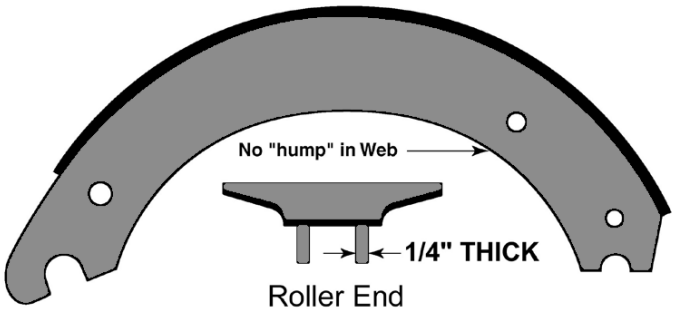

FMSI	BRAKE TYPE	FLEETX FRICTION	NEW LINED BRAKE SHOE KIT NUMBER	HARDWARE KIT #	DIAMETER	WIDTH
4707	QP	FLX101-I FLX101-A FLX108-I FLX108-A FLX102-I FLX102-A FLX107-I FLX107-A FLX185-I FLX185-A FLX307-I FLX307-A	FLX101-I 4707Q 20K STD HK FLX101-A 4707Q 20K STD HK FLX108-I 4707Q 20K PRM HK FLX108-A 4707Q 20K PRM HK FLX102-I 4707Q 23K STD HK FLX102-A 4707Q 23K STD HK FLX107-I 4707Q 23K PRM HK FLX107-A 4707Q 23K PRM HK FLX185-I 4707Q 23K PRM HK FLX185-A 4707Q 23K PRM HK FLX307-1 4707Q 25K PRM HK FLX307-A 4707Q 25K PRM HK	FLX4707QHK	16.1/2”	7”

NEW LINED BRAKE SHOE & HARDWARE KIT

APPLICATION: EATON ES II

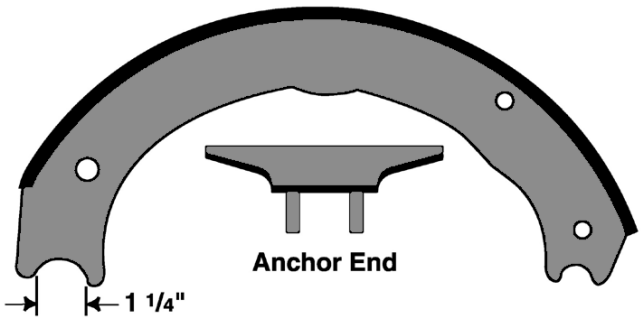

FMSI	BRAKE TYPE	FLEETX FRICTION	NEW LINED BRAKE SHOE KIT NUMBER	HARDWARE KIT #	DIAMETER	WIDTH
4709	ES II	FLX101-I FLX101-A	FLX101-I 4707Q 20K STD HK FLX101-A 4707Q 20K STD HK	FLX4709ES2NHK	16.1/2”	7”
		FLX108-I FLX108-A	FLX108-I 4707Q 20K PRM HK FLX108-A 4707Q 20K PRM HK			
		FLX102-I FLX102-A	FLX102-I 4707Q 23K STD HK FLX102-A 4707Q 23K STD HK			
		FLX107-I FLX107-A	FLX107-I 4707Q 23K PRM HK FLX107-A 4707Q 23K PRM HK			
		FLX185-I FLX185-A	FLX185-I 4707Q 23K PRM HK FLX185-A 4707Q 23K PRM HK			
		FLX307-I FLX307-A	FLX307-1 4707Q 25K PRM HK FLX307-A 4707Q 25K PRM HK			

NEW LINED BRAKE SHOE & HARDWARE KIT

APPLICATION: FRUEHAUF XEM3

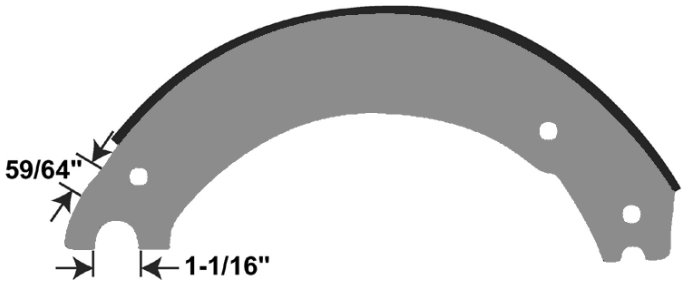

FMSI	BRAKE TYPE	FLEETX FRICTION	NEW LINED BRAKE SHOE KIT NUMBER	HARDWARE KIT #	DIAMETER	WIDTH
4515E	XEM3	FLX101-I FLX101-A	FLX101-I 4707Q 20K STD HK FLX101-A 4707Q 20K STD HK	FLX4515HK	16.1/2”	7”
		FLX108-I FLX108-A	FLX108-I 4707Q 20K PRM HK FLX108-A 4707Q 20K PRM HK			
		FLX102-I FLX102-A	FLX102-I 4707Q 23K STD HK FLX102-A 4707Q 23K STD HK			
		FLX107-I FLX107-A	FLX107-I 4707Q 23K PRM HK FLX107-A 4707Q 23K PRM HK			
		FLX185-I FLX185-A	FLX185-I 4707Q 23K PRM HK FLX185-A 4707Q 23K PRM HK			
		FLX307-I FLX307-A	FLX307-1 4707Q 25K PRM HK FLX307-A 4707Q 25K PRM HK			

NEW LINED BRAKE SHOE & HARDWARE KIT

APPLICATION: MERITOR Q

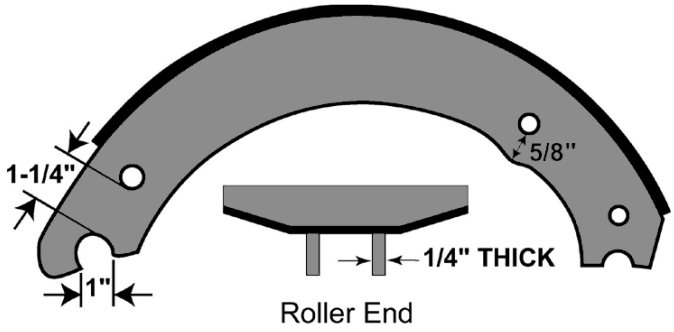

FMSI	BRAKE TYPE	FLEETX FRICTION	NEW LINED BRAKE SHOE KIT NUMBER	HARDWARE KIT #	DIAMETER	WIDTH
4515	Q	FLX101-I FLX101-A	FLX101-I 4707Q 20K STD HK FLX101-A 4707Q 20K STD HK	FLX4707QHK	16.1/2”	7”
		FLX108-I FLX108-A	FLX108-I 4707Q 20K PRM HK FLX108-A 4707Q 20K PRM HK			
		FLX102-I FLX102-A	FLX102-I 4707Q 23K STD HK FLX102-A 4707Q 23K STD HK			
		FLX107-I FLX107-A	FLX107-I 4707Q 23K PRM HK FLX107-A 4707Q 23K PRM HK			
		FLX185-I FLX185-A	FLX185-I 4707Q 23K PRM HK FLX185-A 4707Q 23K PRM HK			
		FLX307-I FLX307-A	FLX307-1 4707Q 25K PRM HK FLX307-A 4707Q 25K PRM HK			

NEW LINED BRAKE SHOE & HARDWARE KIT

APPLICATION: EATON ES

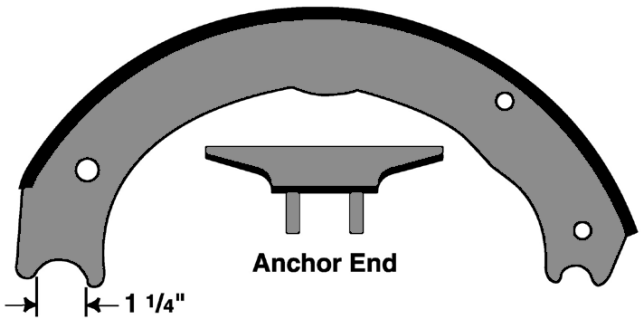

FMSI	BRAKE TYPE	FLEETX FRICTION	NEW LINED BRAKE SHOE KIT NUMBER	HARDWARE KIT #	DIAMETER	WIDTH
4726	ES	FLX101-I FLX101-A	FLX101-I 4707Q 20K STD HK FLX101-A 4707Q 20K STD HK	FLX4726HK	16.1/2”	8.5/8”
		FLX108-I FLX108-A	FLX108-I 4707Q 20K PRM HK FLX108-A 4707Q 20K PRM HK			
		FLX102-I FLX102-A	FLX102-I 4707Q 23K STD HK FLX102-A 4707Q 23K STD HK			
		FLX107-I FLX107-A	FLX107-I 4707Q 23K PRM HK FLX107-A 4707Q 23K PRM HK			
		FLX185-I FLX185-A	FLX185-I 4707Q 23K PRM HK FLX185-A 4707Q 23K PRM HK			

NEW LINED BRAKE SHOE & HARDWARE KIT

APPLICATION: MERITOR Q PLUS

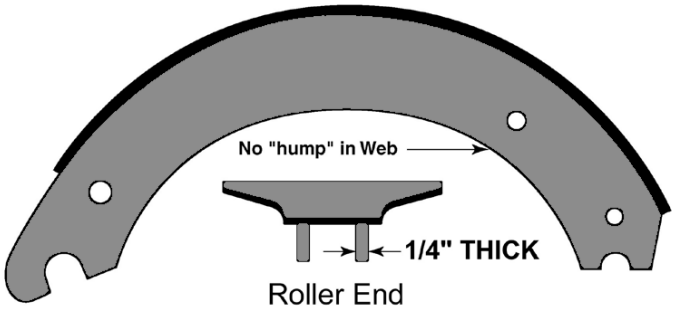

FMSI	BRAKE TYPE	FLEETX FRICTION	NEW LINED BRAKE SHOE KIT NUMBER	HARDWARE KIT #	DIAMETER	WIDTH
4711	QP	FLX101-I FLX101-A	FLX101-I 4707Q 20K STD HK FLX101-A 4707Q 20K STD HK	FLX4707QHK	16.1/2”	8.5/8”
		FLX108-I FLX108-A	FLX108-I 4707Q 20K PRM HK FLX108-A 4707Q 20K PRM HK			
		FLX102-I FLX102-A	FLX102-I 4707Q 23K STD HK FLX102-A 4707Q 23K STD HK			
		FLX107-I FLX107-A	FLX107-I 4707Q 23K PRM HK FLX107-A 4707Q 23K PRM HK			
		FLX185-I FLX185-A	FLX185-I 4707Q 23K PRM HK FLX185-A 4707Q 23K PRM HK			

NEW LINED BRAKE SHOE & HARDWARE KIT

APPLICATION: MERITOR Q PLUS

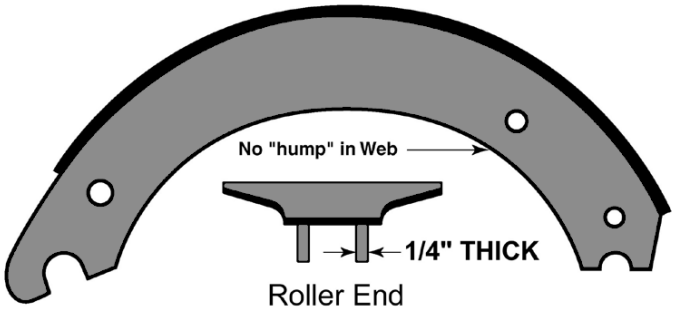

FMSI	BRAKE TYPE	FLEETX FRICTION	NEW LINED BRAKE SHOE KIT NUMBER	HARDWARE KIT #	DIAMETER	WIDTH
4718	QP	FLX101-I FLX101-A	FLX101-I 4707Q 20K STD HK FLX101-A 4707Q 20K STD HK	FLX4707QHK	16.1/2”	8”
		FLX108-I FLX108-A	FLX108-I 4707Q 20K PRM HK FLX108-A 4707Q 20K PRM HK			
		FLX102-I FLX102-A	FLX102-I 4707Q 23K STD HK FLX102-A 4707Q 23K STD HK			
		FLX107-I FLX107-A	FLX107-I 4707Q 23K PRM HK FLX107-A 4707Q 23K PRM HK			
		FLX185-I FLX185-A	FLX185-I 4707Q 23K PRM HK FLX185-A 4707Q 23K PRM HK			

NEW LINED BRAKE SHOE & HARDWARE KIT

APPLICATION: MERITOR Q PLUS

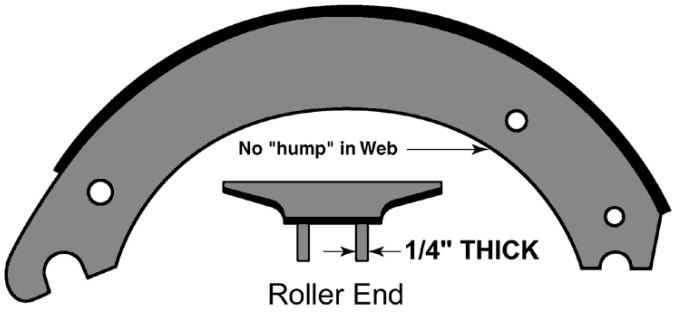

FMSI	BRAKE TYPE	FLEETX FRICTION	NEW LINED BRAKE SHOE KIT NUMBER	HARDWARE KIT #	DIAMETER	WIDTH
4715	QP	FLX101-I FLX101-A	FLX101-I 4707Q 20K STD HK FLX101-A 4707Q 20K STD HK	FLX4715HK	16.1/2”	6”
		FLX108-I FLX108-A	FLX108-I 4707Q 20K PRM HK FLX108-A 4707Q 20K PRM HK			
		FLX102-I FLX102-A	FLX102-I 4707Q 23K STD HK FLX102-A 4707Q 23K STD HK			
		FLX107-I FLX107-A	FLX107-I 4707Q 23K PRM HK FLX107-A 4707Q 23K PRM HK			
		FLX185-I FLX185-A	FLX185-I 4707Q 23K PRM HK FLX185-A 4707Q 23K PRM HK			

NEW LINED BRAKE SHOE & HARDWARE KIT

APPLICATION: EATON ES

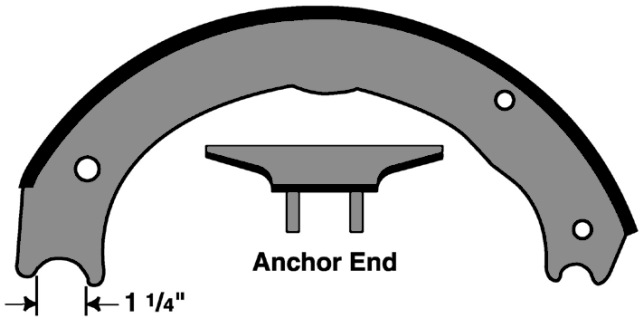

FMSI	BRAKE TYPE	FLEETX FRICTION	NEW LINED BRAKE SHOE KIT NUMBER	HARDWARE KIT #	DIAMETER	WIDTH
4719	ES	FLX101-I FLX101-A	FLX101-I 4707Q 20K STD HK FLX101-A 4707Q 20K STD HK	FLX4719HK	16.1/2”	5”
		FLX108-I FLX108-A	FLX108-I 4707Q 20K PRM HK FLX108-A 4707Q 20K PRM HK			
		FLX102-I FLX102-A	FLX102-I 4707Q 23K STD HK FLX102-A 4707Q 23K STD HK			
		FLX107-I FLX107-A	FLX107-I 4707Q 23K PRM HK FLX107-A 4707Q 23K PRM HK			
		FLX185-I FLX185-A	FLX185-I 4707Q 23K PRM HK FLX185-A 4707Q 23K PRM HK			

NEW LINED BRAKE SHOE & HARDWARE KIT

APPLICATION: MERITOR QP

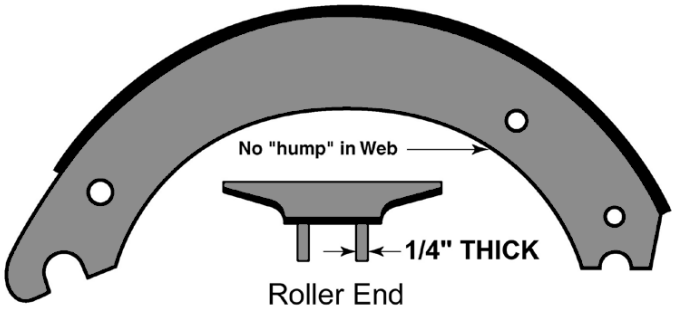

FMSI	BRAKE TYPE	FLEETX FRICTION	NEW LINED BRAKE SHOE KIT NUMBER	HARDWARE KIT #	DIAMETER	WIDTH
4720	QP	FLX101-I FLX101-A	FLX101-I 4707Q 20K STD HK FLX101-A 4707Q 20K STD HK	FLX4720HK	16.1/2”	5”
		FLX108-I FLX108-A	FLX108-I 4707Q 20K PRM HK FLX108-A 4707Q 20K PRM HK			
		FLX102-I FLX102-A	FLX102-I 4707Q 23K STD HK FLX102-A 4707Q 23K STD HK			
		FLX107-I FLX107-A	FLX107-I 4707Q 23K PRM HK FLX107-A 4707Q 23K PRM HK			
		FLX185-I FLX185-A	FLX185-I 4707Q 23K PRM HK FLX185-A 4707Q 23K PRM HK			

NEW LINED BRAKE SHOE & HARDWARE KIT

APPLICATION: MERITOR QP

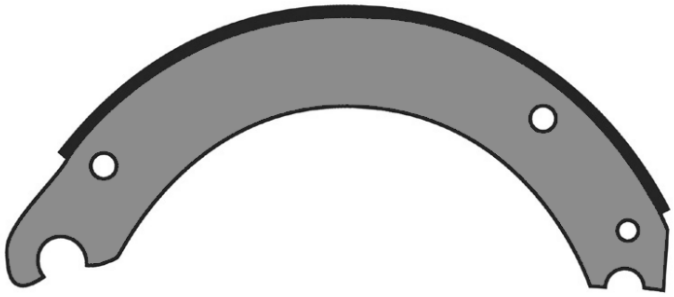

FMSI	BRAKE TYPE	FLEETX FRICTION	NEW LINED BRAKE SHOE KIT NUMBER	HARDWARE KIT #	DIAMETER	WIDTH
4710	QP	FLX101-I FLX101-A	FLX101-I 4707Q 20K STD HK FLX101-A 4707Q 20K STD HK	FLX4710HK	15”	8.5/8”
		FLX108-I FLX108-A	FLX108-I 4707Q 20K PRM HK FLX108-A 4707Q 20K PRM HK			
		FLX102-I FLX102-A	FLX102-I 4707Q 23K STD HK FLX102-A 4707Q 23K STD HK			
		FLX107-I FLX107-A	FLX107-I 4707Q 23K PRM HK FLX107-A 4707Q 23K PRM HK			
		FLX185-I FLX185-A	FLX185-I 4707Q 23K PRM HK FLX185-A 4707Q 23K PRM HK			

APPLICATION & KIT SPECIFICATIONS

NEW LINED BRAKE SHOE & HARDWARE KIT

APPLICATION: EATON ES

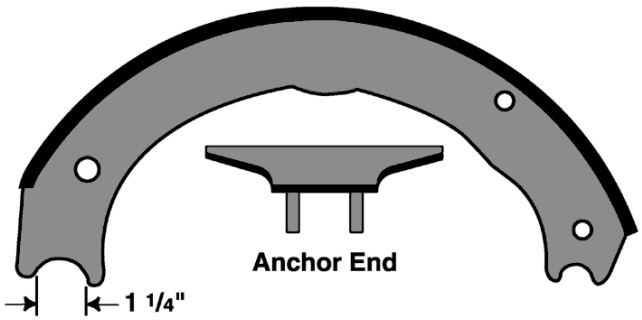

FMSI	BRAKE TYPE	FLEETX FRICTION	NEW LINED BRAKE SHOE KIT NUMBER	HARDWARE KIT #	DIAMETER	WIDTH
4725	ES	FLX101-I FLX101-A	FLX101-I 4707Q 20K STD HK FLX101-A 4707Q 20K STD HK	FLX4725HK	16.1/2”	6”
		FLX108-I FLX108-A	FLX108-I 4707Q 20K PRM HK FLX108-A 4707Q 20K PRM HK			
		FLX102-I FLX102-A	FLX102-I 4707Q 23K STD HK FLX102-A 4707Q 23K STD HK			
		FLX107-I FLX107-A	FLX107-I 4707Q 23K PRM HK FLX107-A 4707Q 23K PRM HK			
		FLX185-I FLX185-A	FLX185-I 4707Q 23K PRM HK FLX185-A 4707Q 23K PRM HK			

NEW LINED BRAKE SHOE & HARDWARE KIT

APPLICATION: MERITOR QP FRONT

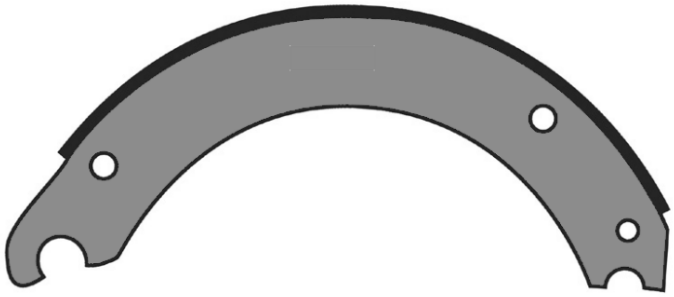

FMSI	BRAKE TYPE	FLEETX FRICTION	NEW LINED BRAKE SHOE KIT NUMBER	HARDWARE KIT #	DIAMETER	WIDTH
4702	QP	FLX101-I FLX101-A	FLX101-I 4707Q 20K STD HK FLX101-A 4707Q 20K STD HK	FLX4702HK	15”	4”
		FLX108-I FLX108-A	FLX108-I 4707Q 20K PRM HK FLX108-A 4707Q 20K PRM HK			
		FLX102-I FLX102-A	FLX102-I 4707Q 23K STD HK FLX102-A 4707Q 23K STD HK			
		FLX107-I FLX107-A	FLX107-I 4707Q 23K PRM HK FLX107-A 4707Q 23K PRM HK			
		FLX185-I FLX185-A	FLX185-I 4707Q 23K PRM HK FLX185-A 4707Q 23K PRM HK			

NEW LINED BRAKE SHOE & HARDWARE KIT

APPLICATION: EATON E FRONT

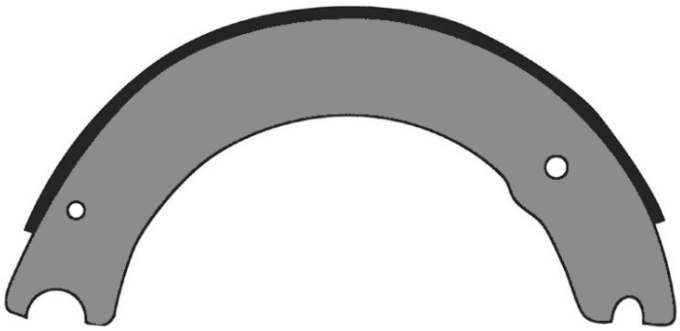

FMSI	BRAKE TYPE	FLEETX FRICTION	NEW LINED BRAKE SHOE KIT NUMBER	HARDWARE KIT #	DIAMETER	WIDTH
1308	E	FLX101-I FLX101-A	FLX101-I 4707Q 20K STD HK FLX101-A 4707Q 20K STD HK	FLX1308HK	15”	4”
		FLX108-I FLX108-A	FLX108-I 4707Q 20K PRM HK FLX108-A 4707Q 20K PRM HK			
		FLX102-I FLX102-A	FLX102-I 4707Q 23K STD HK FLX102-A 4707Q 23K STD HK			
		FLX107-I FLX107-A	FLX107-I 4707Q 23K PRM HK FLX107-A 4707Q 23K PRM HK			
		FLX185-I FLX185-A	FLX185-I 4707Q 23K PRM HK FLX185-A 4707Q 23K PRM HK			

NEW LINED BRAKE SHOE & HARDWARE KIT

APPLICATION: MERITOR Q FRONT

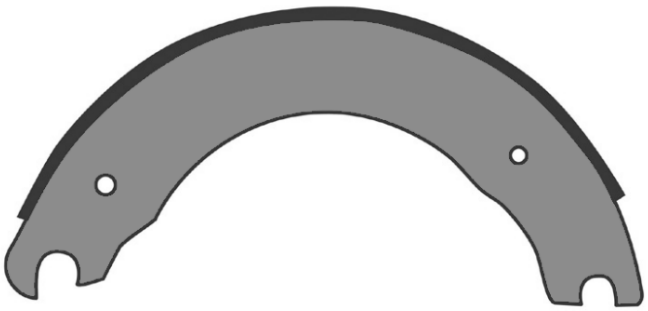

FMSI	BRAKE TYPE	FLEETX FRICTION	NEW LINED BRAKE SHOE KIT NUMBER	HARDWARE KIT #	DIAMETER	WIDTH
1308	Q	FLX101-I FLX101-A	FLX101-I 4707Q 20K STD HK FLX101-A 4707Q 20K STD HK	FLX1308HK	15”	4”
		FLX108-I FLX108-A	FLX108-I 4707Q 20K PRM HK FLX108-A 4707Q 20K PRM HK			
		FLX102-I FLX102-A	FLX102-I 4707Q 23K STD HK FLX102-A 4707Q 23K STD HK			
		FLX107-I FLX107-A	FLX107-I 4707Q 23K PRM HK FLX107-A 4707Q 23K PRM HK			
		FLX185-I FLX185-A	FLX185-I 4707Q 23K PRM HK FLX185-A 4707Q 23K PRM HK			

NEW LINED BRAKE SHOE & HARDWARE KIT

APPLICATION: EATON ES FRONT

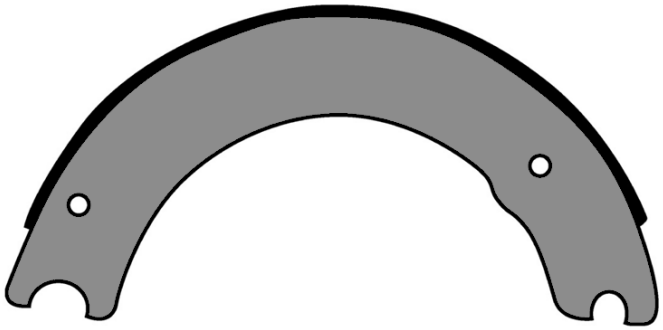

FMSI	BRAKE TYPE	FLEETX FRICTION	NEW LINED BRAKE SHOE KIT NUMBER	HARDWARE KIT #	DIAMETER	WIDTH
1443	ES	FLX101-I FLX101-A	FLX101-I 4707Q 20K STD HK FLX101-A 4707Q 20K STD HK	**FLX1443HK**	15”	4”
		FLX108-I FLX108-A	FLX108-I 4707Q 20K PRM HK FLX108-A 4707Q 20K PRM HK			
		FLX102-I FLX102-A	FLX102-I 4707Q 23K STD HK FLX102-A 4707Q 23K STD HK			
		FLX107-I FLX107-A	FLX107-I 4707Q 23K PRM HK FLX107-A 4707Q 23K PRM HK			
		FLX185-I FLX185-A	FLX185-I 4707Q 23K PRM HK FLX185-A 4707Q 23K PRM HK			

FLEETX®

THANK YOU FOR CHOOSING FLEETX

Engineered for the long haul. Backed by a lean, dependable team committed to fast delivery and OEM-quality parts you can trust — mile after mile.

Techlink Industries Corporation

AUTHORIZED FLEETX DISTRIBUTOR

www.fleetxparts.com

sales@fleetxparts.com

+1-905-737-4060

