FLEETX®

PREMIUM HEAVY DUTY PARTS

BRAKE CALIPERS

PRODUCT CATALOGUE

- BUILT FOR STRENGTH. ENGINEERED TO LAST.
- PRECISION ENGINEERED FOR PERFECT FIT.
- OEM QUALITY. TRUSTED PERFORMANCE.



TECHLINK INDUSTRIES CORPORATION

WWW.FLEETXPARTS.COM

PART NO.: **FLX003799** SN7



Reference No. K003799, SN7201RC
Description Bush on left, -12 degrees, with 3-wire sensor, L

PART NO.: **FLX003800** SN7



Reference No. K003800, SN7211RC
Description Bush on right, -12 degrees, with 3-wire sensor, R

PART NO.: **FLX003803** SN7



Reference No. K003803, SN7203RC
Description Bush on left, 0 degrees, without sensor, L

PART NO.: **FLX003804** SN7

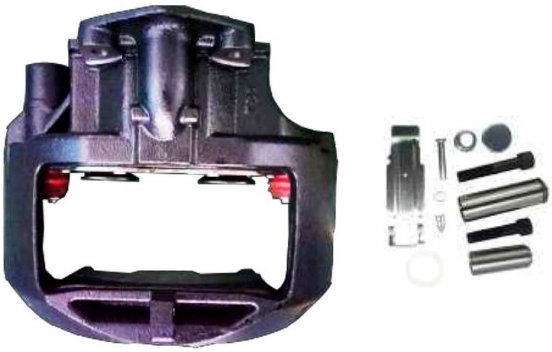

Reference No. K003804, SN7213RC
Description Bush on right, 0 degrees, without sensor, R

PART NO.: **FLX003805** SN7



Reference No. K003805, SN7204RC
Description Bush on left, 0 degrees, with 2-wire sensor, L

PART NO.: **FLX003806** SN7



Reference No. K003806, SN7214RC
Description Bush on right, 0 degrees, with 2-wire sensor, R

PART NO.: **FLX003807** SN7



Reference No.	K003807, SN7205RC
Description	Bush on left, 0 degrees, with 2-wire clip sensor, L

PART NO.: **FLX003808** SN7



Reference No.	K003808, SN7215RC
Description	Bush on right, 0 degrees, with 2-wire clip sensor, R

PART NO.: **FLX003809** SN7



Reference No.	K003809, K001010, K001008, SN7226RC
Description	Bush on left, 0 degrees, with 3-wire sensor, L

PART NO.: **FLX003810** SN7



Reference No.	K003810, K001009, K001017, SN7216RC
Description	Bush on right, 0 degrees, with 3-wire sensor, R

PART NO.: **FLX003813** SN7



Reference No.	K003813, SN7264RC
Description	Bush on left, 0 degrees, with 3-wire clip sensor, L

PART NO.: **FLX003814** SN7



Reference No.	K003814, SN7274RC
Description	Bush on right, 0 degrees, with 3-wire clip sensor, R

PART NO.: **FLX040953K50** SN7



Reference No. 1928820, SN7264RC, K040953K50

Description Bush on left, 0 degrees, with 3-wire clip sensor, L

PART NO.: **FLX040954K50** SN7



Reference No. 1928821, SN7274RC, K040954K50

Description Bush on right, 0 degrees, with 3-wire clip sensor, R

PART NO.: **FLX012634** SK7



Reference No. K012634, K001909, SK7011

Description Bush on left, 0 degrees, without sensor, L

PART NO.: **FLX012633** SK7



Reference No. K012633, K001908, SK7001

Description Bush on right, 0 degrees, without sensor, R

PART NO.: **FLXSM7012** SM7



Reference No. SM7012RC, K052391K50

Description Bush on left, -12 degrees, with 3-wire sensor, L

PART NO.: **FLXSM7002** SM7



Reference No. SM7002RC, K052390K50

Description Bush on right, -12 degrees, with 3-wire sensor, R

PART NO.: **FLXSL7514** SL7



Reference No. SL7514RC, K052381K50

Description Bush on left, -12 degrees, with 3-wire sensor, L

PART NO.: **FLXSL7504** SL7



Reference No. SL7504RC, K052380K50

Description Bush on right, -12 degrees, with 3-wire sensor, R

PART NO.: **FLXSL7515** SL7



Reference No. SL7515RC, K052383K50

Description Bush on left, -12 degrees, with 2-wire sensor, L

PART NO.: **FLXSL7505** SL7



Reference No. SL7505RC, K052384K50

Description Bush on right, -12 degrees, with 2-wire sensor, R

PART NO.: **FLX802985** ADB22



Reference No. K802985 K113888X

Description Bush on left, 0 degrees, without sensor, double boot, L

PART NO.: **FLX802984** ADB22



Reference No. K802984 K113887X

Description Bush on right, 0 degrees, without sensor, double boot, R

PART NO.: **FLX149715** ADB22-LT



Reference No.	K149715
Description	Bush on left, 0 degrees, without sensor, double boot, LT, L

PART NO.: **FLX149714** ADB22-LT



Reference No.	K149714
Description	Bush on right, 0 degrees, without sensor, double boot, LT, R

PART NO.: **FLX081143** ADB22



Reference No.	K081143 K109962X
Description	Bush on left, +12 degrees, without sensor, double boot, L

PART NO.: **FLX081142** ADB22



Reference No.	K081142, K109961X
Description	Bush on right, +12 degrees, without sensor, double boot, R

PART NO.: **FLX081257** ADB22



Reference No.	K081257 K109958X
Description	Bush on left, +12 degrees, without sensor, L

PART NO.: **FLX081256** ADB22



Reference No.	K081256, K109957X
Description	Bush on right, +12 degrees, without sensor, R

PART NO.: **FLX002962** SB7



Reference No. K002962, SB7450RC

Description Bush on left, radial type, +93 degrees, without sensor, L

PART NO.: **FLX002963** SB7



Reference No. K002963, SB7460RC

Description Bush on right, radial type, +93 degrees, without sensor, R

PART NO.: **FLX002964** SB7



Reference No. K002964, SB7451RC

Description Bush on left, radial type, +93 degrees, with 3-wire sensor, L

PART NO.: **FLX002965** SB7



Reference No. K002965, SB7461RC

Description Bush on right, radial type, +93 degrees, with 3-wire sensor, R

PART NO.: **FLX013173** SN6



Reference No. K013173, SN6570RC

Description Bush on left, +5 degrees, without sensor, L

PART NO.: **FLX013174** SN6



Reference No. K013174, SN6580RC

Description Bush on right, +5 degrees, without sensor, R

PART NO.: **FLX013175** SN6



Reference No. K013175, SN6558RC
Description Bush on left, +5 degrees, with 2-wire sensor, L

PART NO.: **FLX013176** SN6



Reference No. K013176, SN6568RC
Description Bush on right, +5 degrees, with 2-wire sensor, R

PART NO.: **FLX013177** SN6



Reference No. K013177, SN6556RC, K009161
Description Bush on left, +5 degrees, with 3-wire sensor, L

PART NO.: **FLX013178** SN6



Reference No. K013178, SN6566RC, K009162
Description Bush on right, +5 degrees, with 3-wire sensor, R

PART NO.: **FLX003781** SN7



Reference No. K003781, SN7185RC
Description Bush on left, -12 degrees, without sensor, L

PART NO.: **FLX003782** SN7



Reference No. K003782, SN7195RC
Description Bush on right, -12 degrees, without sensor, R

PART NO.: **FLX003783** SN7

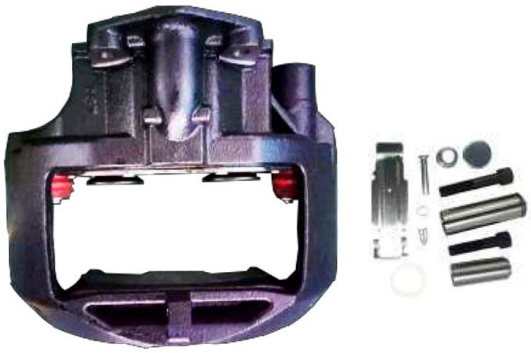

Reference No. K003783, SN7203RC
Description Bush on left, 0 degrees, without sensor, L

PART NO.: **FLX003784** SN7

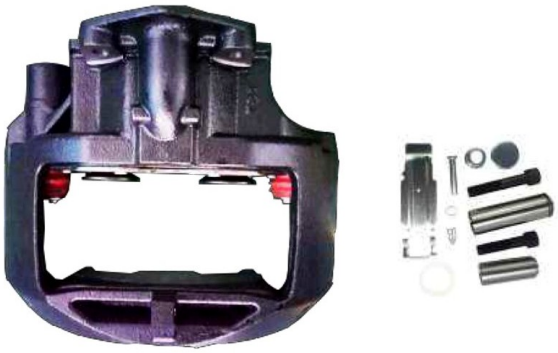

Reference No. K003784, SN7213RC
Description Bush on right, 0 degrees, without sensor, R

PART NO.: **FLX003795** SN7



Reference No. K003795, SN7185RC, K003781
Description Bush on left, -12 degrees, without sensor, L

PART NO.: **FLX003796** SN7



Reference No. K003796, SN7195RC, K003782
Description Bush on right, -12 degrees, without sensor, R

PART NO.: **FLX003797** SN7



Reference No. K003797, SN7200RC, K000503, K011703
Description Bush on left, -12 degrees, with 2-wire sensor, L

PART NO.: **FLX003798** SN7



Reference No. K003798, SN7210RC, K000502, K011702
Description Bush on right, -12 degrees,
with 2-wire sensor, R

PART NO.: **FLX003801** SN7



Reference No. K003801, K013160, SN7289RC

Description Bush on left, -12 degrees, with 3-wire clip sensor, L

PART NO.: **FLX003802** SN7



Reference No. K003802, K013161, SN7299RC

Description Bush on right, -12 degrees, with 3-wire clip sensor, R

PART NO.: **FLX-802984-01** ADB22

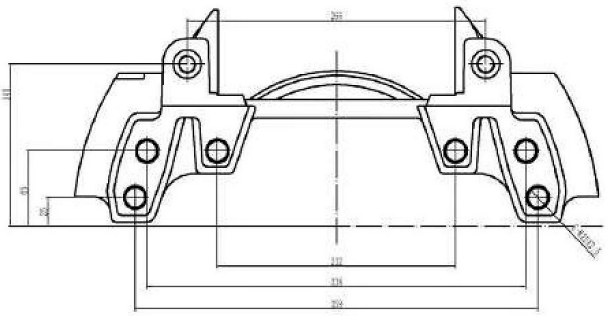

Reference No. K043288

Description For TK802985/TK802984

PART NO.: **FLX-081142-01** ADB22

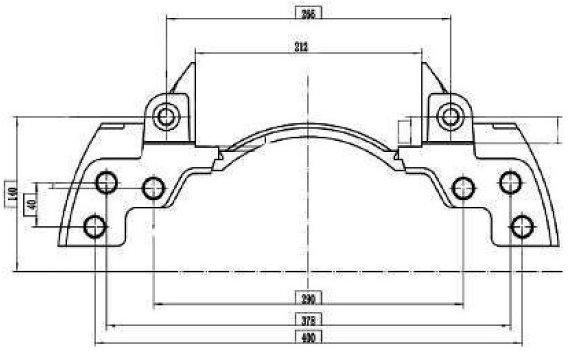

Reference No. K051853

Description For TK081143/TK081142

PART NO.: **FLX-081256-01** ADB22

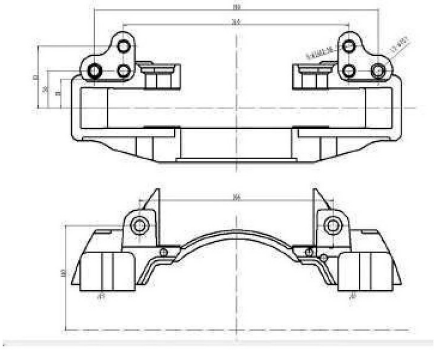

Reference No. K056559

Description For TK081257/TK081256

PART NO.: **FLX-149714-02** ADB22-LT

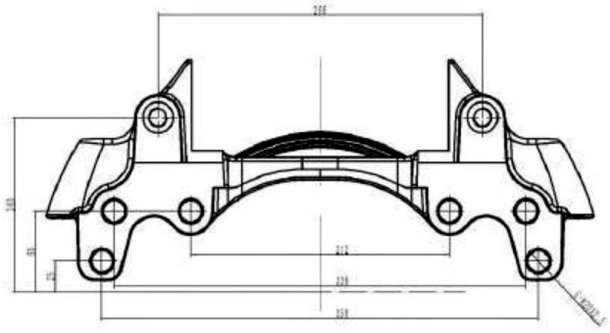

Reference No. –

Description For TK149715/TK149714

PART NO.: **FLX22.5K-02F** **SN7**

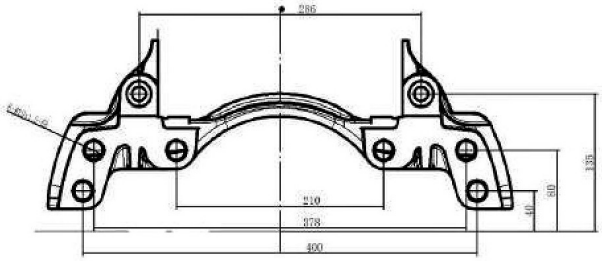

Reference No.	K000026
Description	For 22.5' brake caliper axial type

PART NO.: **FLX22.5K-02A** **SN7**

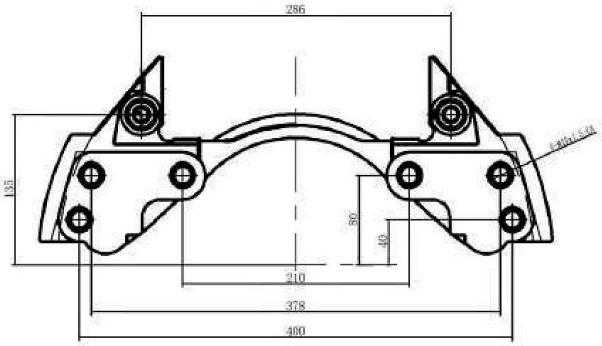

Reference No.	–
Description	For 22.5' brake caliper axial type

PART NO.: **FLX22.5K-3502-02-L/R** **SB7**

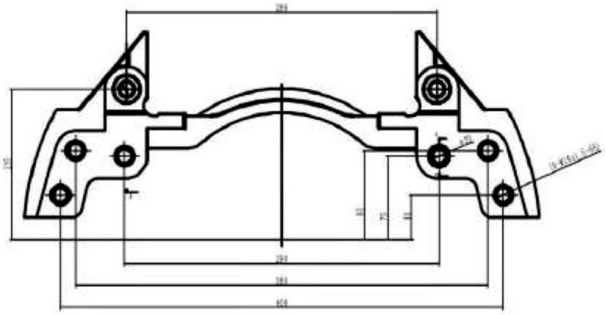

Reference No.	K001529/K001530
Description	For 22.5' brake caliper radial type

PART NO.: **FLX17.5W-L** **PAN 17**



Reference No. 40175072

PART NO.: **FLX17.5W-R** **PAN 17**



Reference No. 40175073

PART NO.: **FLX19.5W-L** **PAN 19**



Reference No. 40195037

PART NO.: **FLX19.5W-R** **PAN 19**



Reference No. 40195038

PART NO.: **FLX22W-L** **PAN 22**



Reference No. 40225015

PART NO.: **FLX22W-R** **PAN 22**



Reference No. 40225016

PART NO.: **FLX17.5W-02** **PAN 17**

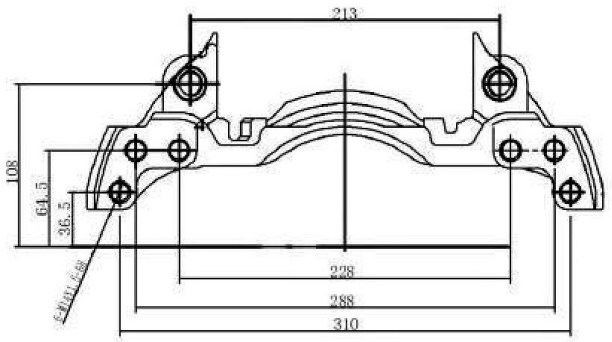

Reference No. –

PART NO.: **FLX19.5W-02** **PAN 19**

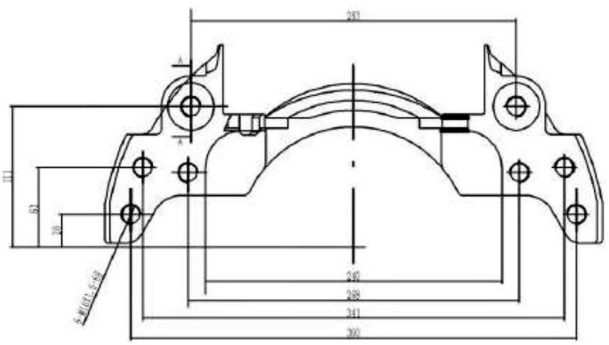

Reference No. –

PART NO.: **FLX19.5W-02C** **PAN 19**

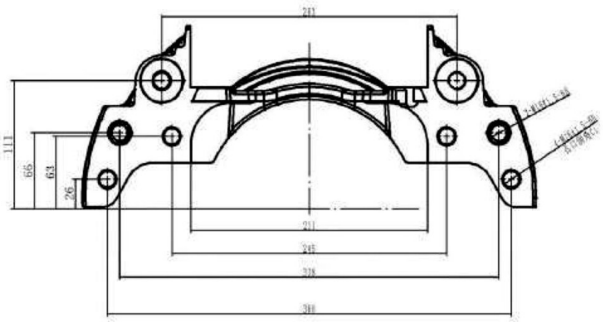

Reference No. –

PART NO.: **FLX19.5W-02B** **PAN 19**

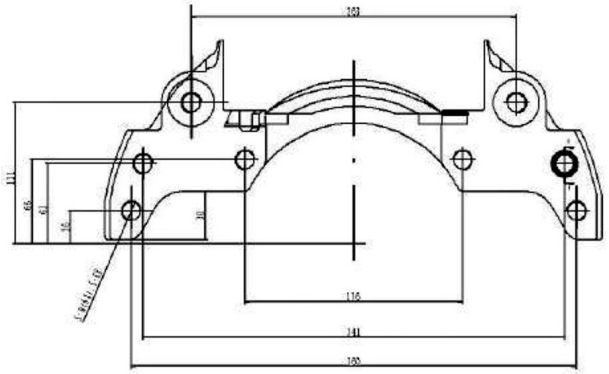

Reference No. –

PART NO.: **FLX22W-HRKS-02** **PAN 22**

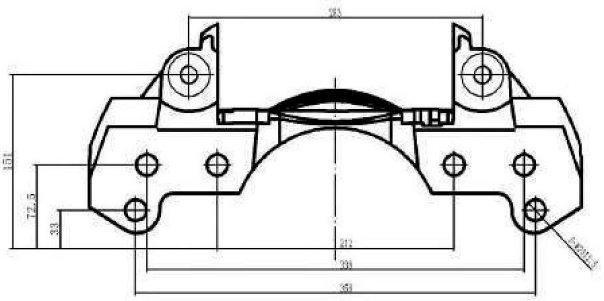

Reference No. –

PART NO.: **FLX22W-02A** **PAN 22**

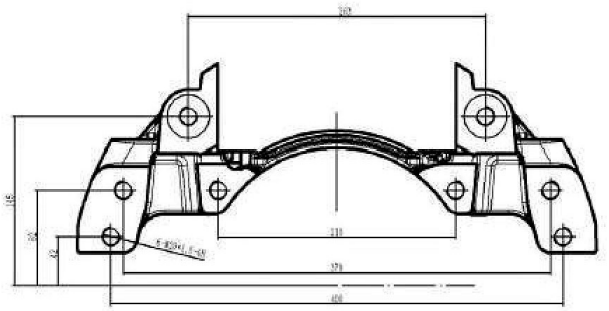

Reference No. –

PART NO.: **FLXRG726** ELSA225



Reference No. 68033816, 20523651
Description Radial type

PART NO.: **FLXRG727** ELSA225



Reference No. 68033817, 20523652
Description Radial type

PART NO.: **FLXRG728** ELSA225



Reference No. 68033812, 20526990
Description Axial type

PART NO.: **FLXRG729** ELSA225



Reference No. 68033813, 20526991
Description Axial type

PART NO.: **FLXRG736** ELSA225



Reference No. 68033810, 20566777
Description Axial type

PART NO.: **FLXRG737** ELSA225



Reference No. 68033811, 20566778
Description Axial type

PART NO.: **FLXDX195-L** DX195



Reference No. 15224837SR, DX195.52

PART NO.: **FLXDX195-R** DX195



Reference No. 15224836SR, DX195.51

PART NO.: **FLXEX225-3501-100-02** ELSA225

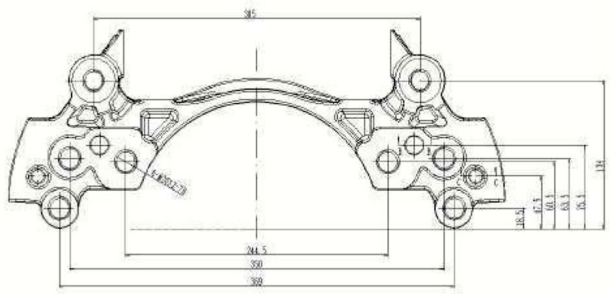

Reference No. MCK1297

PART NO.: **FLX0536272010** TSB4309



Reference No. BBC72010

PART NO.: **FLX0536272020** TSB4309



Reference No. BBC72020

PART NO.: **FLXZ3-100/200**



Reference No. AZ9100443310

PART NO.: **FLXZ4-100/200**



Reference No. AZ9100444320/AZ9100444420

PART NO.: **FLX22.5-DA03-3501-100/200**



Reference No. YF3501DA03

PART NO.: **FLX20-DA05-3501-100/200**



Reference No. YF3502DA05

FLX22.5K-KIT030

SB6 SB7

Caliper Repair Kit Set



No.	Code	Description	Pcs.
1	K000375	Guide Repair Kit	1
2	FLX22.5K-013	Bridge Kit	1
3	FLX22.5K-012-1	Calibration Bolt	2
4	FLX22.5K-017	Return Spring	1
5	FLX22.5K-037	Roller Bearing	2
6	K010604	Tappet Repair Kit	1
7	FLX22.5K-015	Sprocket	1
8	FLX22.5K-016	Torque Protector	1
9	FLX22.5K-019	Adjuster Mechanism	1
10	FLX22.5K-005	Chain	1
11	FLX22.5K-020	Driven Adjuster	1
12	FLX22.5K-038	Brake Lever	1

FLX22.5K-KIT031

SN6 SN7

Caliper Repair Kit Set



No.	Code	Description	Pcs.
1	K000472	Guide Repair Kit	1
2	FLX22.5KII-013A	Bridge Kit	1
3	FLX22.5K-012-1	Calibration Bolt	2
4	FLX22.5K-017	Return Spring	1
5	FLX22.5KII-012	Roller Bearing	2
6	K010603	Tappet Repair Kit	1
7	FLX22.5K-015	Sprocket	1
8	FLX22.5K-016	Torque Protector	1
9	FLX22.5K-019	Adjuster Mechanism	1
10	FLX22.5K-005	Chain	1
11	FLX22.5K-020	Driven Adjuster	1
12	FLX22.5KII-014G	Brake Lever Unit	1
13	FLX22.5KII-015B	Steel Cover	1

FLX22.5K-KIT032

SL7

Caliper Repair Kit Set



No.	Code	Description	Pcs.
1	K001915	Guide Repair Kit	1
2	FLX22.5KII-013A	Bridge Kit	1
3	FLX22.5K-012-1	Calibration Bolt	2
4	FLX22.5K-017	Return Spring	1
5	FLX22.5KII-012	Roller Bearing	2
6	K046523K50	Tappet Repair Kit	1
7	FLX22.5K-015	Sprocket	1
8	FLX22.5K-016	Torque Protector	1
9	FLX22.5K-019	Adjuster Mechanism	1
10	FLX22.5K-005	Chain	1
11	FLX22.5K-020	Driven Adjuster	1
12	FLX22.5KII-014A	Brake Lever Unit	1
13	FLX-ADB22-015	Steel Cover	1

FLX22.5K-KIT033

SM7



No.	Code	Description	Pcs.
1	K001915	Guide Repair Kit	1
2	FLX22.5KII-013A	Bridge Kit	1
3	FLX22.5K-012-1	Calibration Bolt	2
4	FLX22.5K-017	Return Spring	1
5	FLX22.5KII-012	Roller Bearing	2
6	K046523K50	Tappet Repair Kit	1
7	FLX22.5K-015	Sprocket	1
8	FLX22.5K-016	Torque Protector	1
9	FLX22.5K-019	Adjuster Mechanism	1
10	FLX22.5K-005	Chain	1
11	FLX22.5K-020	Driven Adjuster	1
12	FLX22.5KII-014A	Brake Lever Unit	1
13	FLX22.5KII-015B	Steel Cover	1

FLX22.5KII-KIT007

SN7

Adjuster complete



No.	Code	Description	Pcs.
1	FLX22.5K-012-1	Calibration Bolt	2
2	FLX22.5KII-013A	Bridge Kit	1
3	K010603	Tappet Repair Kit	1
4	FLX22.5K-017	Return Spring	1
5	FLX22.5KII-012	Roller Bearing	2
6	FLX22.5K-005	Chain	1
7	FLX22.5K-015	Sprocket	1
8	FLX22.5K-016	Torque Protector	1
9	FLX22.5K-019	Adjuster Mechanism	1
10	FLX22.5K-020	Driven Adjuster	1
11	FLX22.5KII-014A	Brake Lever	1
12	FLX22.5KII-015B	Steel Cover	1

FLX22.5K-KIT002

SB7

Adjuster complete



No.	Code	Description	Pcs.
1	FLX22.5K-012-1	Calibration Bolt	2
2	FLX22.5K-013	TGT22.5K-038	1
3	FLX22.5K-038	Brake Lever Unit	1
4	FLX22.5K-005	Chain	1
5	FLX22.5K-017	Return Spring	1
6	FLX22.5K-037	Roller Bearing	2
7	FLX22.5K-019B	Adjuster (Sprocket)	1
8	FLX22.5K-020C	Driven Adjuster	1
9	K010604	Tappet Repair Kits	1

K010604

SB6 SB7

Piston Seals Repair Kits



No.	Description	Dimension	Pcs.
1	Tappet Boot	74mm	2
2	Inner Seal		2
3	Tappet Bush	18*16*10mm	2

II39769F0063

SB6 SB7

Seals Cap Repair Kits



No.	Description	Dimension	Pcs.
1	Steel Cap	50*28mm	1
2	O Ring		1

II39769F0062

SB6 SB7

Guide Repair Kits



No.	Description	Dimension	Pcs.
1	Caliper Pin Short	34*80mm	1
2	Caliper Pin Long	36*114mm	1
3	Pin Bush	40*36*82mm	1
4	Pin Bolt	M16*1.5*85mm	2
5	Steel Cap	50*28mm	1
6	Rubber Bush		1
7	Pin Boot		1
8	Ring		1
9	O Ring		1

K000472

SB6 SB7 SN6 SN7 SK7

Guide Repair Kits



No.	Description	Dimension	Pcs.
1	Caliper Pin Short	32*80mm	1
2	Caliper Pin Long	36*114mm	1
3	Pin Bolt Short	M16*1.5*80mm	1
4	Pin Bolt Long	M16*1.5*85mm	1
5	Caliper Pin Bush	40*36*82mm	1
6	Rubber Bush	Ø 39 mm (Metal)	1
7	Caliper Pin Bolt Ring		1
8	Caliper Pin Boot		1
9	Caliper Pin Cap	26*11.5mm	1
10	Caliper Pin Cap	40*14.5mm	1

K000697

SB6 SB7

Caliper Short Pin Repair Kit



No.	Description	Dimension	Pcs.
1	Caliper Pin Short	32*80mm	1
2	Rubber Bush	39mm	1

II350470063

SB6 SB7

Caliper Cap Set



No.	Description	Dimension	Pcs.
1	Outer Boot		1
2	Outer Boot Clip		1

K000935

SB5 SB6 SB7

Guide Repair Kits



No.	Description	Dimension	Pcs.
1	Caliper Pin Long	36*145mm	1
2	Pin Bolt	M16*1.5*150mm	1
3	Caliper Pin Bush	40*36*82mm	1
4	Caliper Pin Boot		1
5	Caliper Pin Cap		1
6	Pin Boot Ring		1
7	Bellow Cap Clamp		1

K000696

SB6 SB7

Guide Repair Kits



No.	Description	Dimension	Pcs.
1	Caliper Pin Long	36*114mm	1
2	Pin Bolt	M16*1.5*85mm	1
3	Caliper Pin Bush	40*36*82mm	1
4	Caliper Pin Boot		1
5	Steel Cap	50*28mm	1
6	Ring		1
7	O Ring		1

K000132

SB6 SB7

Guide Repair Kits



No.	Description	Dimension	Pcs.
1	Caliper Pin Short	34*80mm	1
2	Caliper Pin Long	36*135mm	1
3	Pin Bolt Short	M16*1.5*85mm	1
4	Pin Bolt Long	M16*1.5*140mm	1
5	Caliper Pin Bush	40*36*82mm	1
6	Rubber Bush		1
7	Inner Boot		1
8	Outer Boot		1
9	Ring		1
10	Outer Boot Clip		1

II328090062

SB6 SB7

Guide Repair Kits



No.	Description	Dimension	Pcs.
1	Caliper Pin Short	34*80mm	1
2	Caliper Pin Long	36*145mm	1
3	Pin Bolt Short	M16*1.5*80mm	1
4	Pin Bolt Long	M16*1.5*150mm	1
5	Caliper Pin Bush	40*36*82mm	1
6	Rubber Bush	34*40*50mm	1
7	Inner Boot		1
8	Outer Boot		1
9	Ring		1
10	Outer Boot Clip		1

FLX22.5K-005

Chain



FLX22.5K-037

SB6 SB7

Roll Bearing



1448914

SB6 SB7

Cap and Seals Repair Kits



No.	Description	Dimension	Pcs.
1	Pin Cap	54*28mm	1
2	Pin Cap O-Ring		1
3	Pin Boot		1
4	Pin Boot Ring		1

II368470064

SB5 SB6 SB7

Rubber Bush Guide Repair Kits



No.	Description	Dimension	Pcs.
1	Caliper Pin Short	34*80mm	1
2	Pin Bolt Short	M16*1.5*85mm	1
3	Rubber Bush		1

K001532

SB6 SB7

Guide Repair Kits



No.	Description	Dimension	Pcs.
1	Caliper Pin Short	32*80mm	1
2	Caliper Pin Long	36*114mm	1
3	Pin Bolt Short	M16*1.5*80mm	1
4	Pin Bolt Long	M16*1.5*85mm	1
5	Caliper Pin Bush	40*36*82mm	1
6	Metal Rubber Bush	35mm (Metal)	1
7	Inner Boot		1
8	Steel Cap	50*28mm	1
9	Cap	26*11.5mm	1
10	Ring		1
11	O Ring		1

K000375

SB6 SB7

Guide Repair Kits



No.	Description	Dimension	Pcs.
1	Caliper Pin Short	32*80mm	1
2	Caliper Pin Long	36*114mm	1
3	Pin Bolt Short	M16*1.5*80mm	1
4	Pin Bolt Long	M16*1.5*85mm	1
5	Caliper Pin Bush	40*36*82mm	1
6	Metal Rubber Bush	39mm (Metal)	1
7	Inner Boot		1
8	Steel Cap	50*28mm	1
9	Cap	26*11.5mm	1
10	Ring		1
11	O Ring		1

FLX22.5K-012

Calibration Three Thread



With Bushing

FLX22.5K-012-1

Calibration Three Thread



K010813

SB6 SB7

Guide Repair Kits



No.	Description	Dimension	Pcs.
1	Caliper Pin Short	36*64mm	1
2	Caliper Pin Long	36*114mm	1
3	Pin Bolt Short	M16*1.5*70mm	1
4	Pin Bolt Long	M16*1.5*85mm	1
5	Caliper Pin Bush	40*36*82mm	1
6	Guide Sleeve	40*36*20mm	1
7	Inner Boot		2
8	Steel Cap	40*25mm	1
9	Steel Cap	50*28mm	1
10	Ring		2
11	O Ring		1

K031844K50

SB6 SB7

Guide Repair Kits



No.	Description	Dimension	Pcs.
1	Caliper Pin Short	32*84mm	1
2	Caliper Pin Long	36*114mm	1
3	Pin Bolt Short	M16*1.5*80mm	1
4	Pin Bolt Long	M16*1.5*85mm	1
5	Caliper Pin Bush	40*36*82mm	1
6	Inner Boot		1
7	Steel Cap	50*28mm	1
8	Steel Cap	40*14.5mm	1
9	Ring		1
10	O Ring		1
11	Steel Cap	42.5*37mm	1
12	Rubber Bush	39mm (Metal)	1
13	Ring		1
14	Inner Boot		1

K001928

SN5

Guide Repair Kits



No.	Description	Dimension	Pcs.
1	Caliper Pin Short	30*72mm	1
2	Caliper Pin Long	30*99mm	1
3	Pin Bolt Short	M16*1.5*75mm	1
4	Pin Bolt Long	M16*1.5*105mm	1
5	Caliper Pin Bush	34*30*65mm	1
6	Guide Sleeve	34*30*20mm	1
7	Inner Boot Small		2
8	Steel Cap	34*14mm	2
9	Boot Retainer Ring		2

K001915

SL7 SM7 SN6 SN7 SK7

Guide Repair Kits



No.	Description	Dimension	Pcs.
1	Caliper Pin Short	32*80mm	1
2	Caliper Pin Long	36*114mm	1
3	Pin Bolt Short	M16*1.5*80mm	1
4	Pin Bolt Long	M16*1.5*85mm	1
5	Caliper Pin Bush	40*36*82mm	1
6	Rubber Bush	39mm (Metal)	1
7	Inner Boot		1
8	Steel Cap	40*15mm	1
9	Ring		1

K067417K50

SB6 SB7

Guide Repair Kits



No.	Description	Dimension	Pcs.
1	Caliper Pin Short	32*80mm	1
2	Caliper Pin Long	36*114mm	1
3	Pin Bolt Short	M16*1.5*80mm	1
4	Pin Bolt Long	M16*1.5*85mm	1
5	Caliper Pin Bush	40*36*82mm	1
6	Rubber Bush	39mm&35mm	2
7	Lock Ring & Bolt Ring		2
8	Pin Boot		1
9	Steel Cap	50*28mm	1
10	Steel Cap	40*14.5mm	1
11	O Ring		1

K004100

SN6 SN7 SK7

Guide Repair Kits



No.	Description	Dimension	Pcs.
1	Caliper Pin Short	36*64mm	1
2	Caliper Pin Long	36*114mm	1
3	Pin Bolt Short	M16*1.5*70mm	1
4	Pin Bolt Long	M16*1.5*85mm	1
5	Caliper Pin Bush	40*36*82mm	1
6	Guide Sleeve	40*36*20mm	1
7	Inner Boot		2
8	Steel Cap	40*14.5mm	1
9	Steel Cap	40*24.5mm	1
10	Ring		2

K046523K50

SL7 SM7

Piston Seals Repair Kits



No.	Description	Dimension	Pcs.
1	Tappet Boot	54mm	2
2	Inner Seal		2
3	Tappet Bush	17*15*7mm	2

K010603

SN6 SN7

Piston Seals Repair Kits



No.	Description	Dimension	Pcs.
1	Tappet Boot	69mm	2
2	Inner Seal		2
3	Tappet Bush	18*16*10mm	2

K00698

SN6 SN7 SK7

Bush and Guide Repair Kit



No.	Description	Dimension	Pcs.
1	Caliper Pin Short	32*80mm	1
2	Pin Bolt Short	M16*1.5*80mm	1
3	Rubber Bush	39mm (Metal)	1
4	Steel Cap	26*11.5mm	1

FLX22.5K-020C

Caliper Driven Adjuster



FLX22.5K-020
Caliper Driven Adjuster



FLX22.5K-020A
Caliper Driven Adjuster



FLX22.5K-020D
Caliper Driven Adjuster



FLX22.5K-019B
Caliper Adjuster Mechanism



Hexagon Type

FLX22.5K-019
Caliper Adjuster Mechanism



FLX22.5K-028
Brake Pad Retainer Kit



FLX22.5K-019A
Caliper Adjuster Mechanism



FLX22.5K-019E
Caliper Adjuster Mechanism



FLX22.5K-014
Brake Lever Unit



0 Angle

FLX22.5KII-014A
Brake Lever Unit



12 Angle

FLX22.5KII-014B-BJ
Brake Lever Unit



12 Angle

FLX22.5KII-014C
Brake Lever Unit



0 Angle

FLX22.5KII-014G
Brake Lever Unit



0 Angle

FLX22.5K-038
Brake Lever Unit



FLX22.5KII-014H
Brake Lever Unit



FLX22.5K-006

SB6 SB7 SN6 SN7 SK7

Plastic Cover Unit



No.	Description	Dimension	Pcs.
1	Plastic Cover		1
2	O-Ring		1
3	Seal		1
4	Adjuster Cap	38mm	1
5	Screw and Rivet		6

FLX22.5K-006B

SB6 SB7 SN6 SN7 SK7

Plastic Cover Unit



No.	Description	Dimension	Pcs.
1	Plastic Cover		1
2	O-Ring		1
3	Plastic Cover Cap		1
4	Seal		1
5	Adjuster Cap	38mm	1
6	Sensor 2 Cable		1
7	Screw and Rivet		6

FLX22.5K-006A

SB6 SB7 SN6 SN7 SK7

Plastic Cover Unit



No.	Description	Dimension	Pcs.
1	Plastic Cover		1
2	O-Ring		1
3	Plastic Cover Cap		1
4	Seal		1
5	Adjuster Cap	38mm	1
6	Sensor 3 Cable		1
7	Screw and Rivet		6

FLX22.5K-006D

SB6 SB7 SN6 SN7 SK7

Plastic Cover Unit



No.	Description	Dimension	Pcs.
1	Plastic Cover with Clip		1
2	O-Ring		1
3	Adjuster Cap	38mm	1
4	Seal		1
5	Sensor 3 Cable		1
6	Screw and Rivet		6

FLX22.5K-006G

SN5

Plastic Cover Unit



No.	Description	Dimension	Pcs.
1	Plastic Cover		1
2	O-Ring		1
3	Adjuster Cap	38mm	1
4	Seal		1
5	Screw and Rivet		6
6	Sensor 3 Cable		1

FLX22.5K-006F

SB6 SB7

Plastic Cover Unit



No.	Description	Dimension	Pcs.
1	Plastic Cover		1
2	O-Ring		1
3	Adjuster Cap	38mm	1
4	Seal		1
5	Screw and Rivet		6
6	Sensor 3 Cable		1

FLX22.5KII-012

SL7 SM7 SN6 SN7 SK7

Roll Bearing



With Hole

FLX22.5KII-013

SN6 SN7 SK7

Bridge Unit



No.	Description	Dimension	Pcs.
1	Bridge Unit		1

FLX22.5K-013

SB6 SB7

Bridge Unit



No.	Description	Dimension	Pcs.
1	Bridge Unit		1

FLX22.5KII-013A

SL7 SM7 SN6 SN7 SK7

Bridge Unit



No.	Description	Dimension	Pcs.
1	Bridge Unit		1

FLX-ADB22-015

SL7 ADB22

Steel Cover



No.	Description	Dimension	Pcs.
1	Steel Cover		1
2	Bolt Short	8*16mm	–
3	Bolt Long	8*50mm	1

FLX22.5KII-015B

SN6 SN7 SK7

Steel Cover



No.	Description	Dimension	Pcs.
1	Bridge Unit		1

FLX22.5K-016

SB6 SB7 SN6 SN7 SK7

Torque Protector



FLX22.5K-015

SB6 SB7 SN6 SN7 SK7

Sprocket



FLX17.5W-KIT010

PAN 17

Caliper Repair Kit Set



No.	Code	Description	Pcs.
1	12999699	Guide Pin Repair Kit	1
2	FLX17.5W-014	Adjuster Mechanism	1
3	FLX19.5W-015	Return Spring	2
4	AD02-060	Roller Bearing	2
5	FLX16W-005	Brake Lever Unit	1
6	FLX16W-004	Gasket	2
7	FLX16W-016	Plug	1

FLX19.5W-KIT010

PAN 19

Caliper Repair Kit Set



No.	Code	Description	Pcs.
1	12999776	Guide Repair Kits	1
2	FLX19.5W-014	Adjuster Mechanism	1
3	FLX19.5W-015	Return Spring	2
4	FLX19.5W-013	Roller Bearing	2
5	FLX19.5W-012	Brake Lever Unit	1
6	FLX19.5W-011	Gasket	1
7	FLX19.5W-009	Seal	1
8	FLX19.5W-008	Plug	1

FLX-MAX-KIT010

MAXX-22

Caliper Repair Kit Set



No.	Code	Description	Pcs.
1	6403229262	Guide Repair Kits	1
2	FLC-WBCMX-01	Adjuster Mechanism	1
3	FLX-WBCMX-011	Return Spring	2
4	FLX-WBCMX-05-1	Brake Lever Unit	1
5	FLX-WBCMX-05-2	Lever Bush	2
6	FLX-WBCMX-012	Roller Bearing	2
7	FLX-WBCMX-06	Steel Cover	1
8	FLX-WBCMX-1-007	Manual Shaft	1
9	FLX-WBCMX-04	Plug	1
10	FLX-WBCMX-1-008	Seal	1
11	FLX-WBCMX-1-009	Manual Gear	1
12	FLX-WBCMX-05-3	Lever Roller	1

12999699

PAN 17

Guide Pin Repair Kit



No.	Description	Dimension	Pcs.
1	Guide Pin Short	30*78mm	1
2	Guide Pin Long	30*91mm	1
3	Bolt Short	M16*1.5*70mm	1
4	Bolt Long	M16*1.5*90mm	1
5	Guide Pin Bush	34*30*20mm	3
6	Adjuster Screw Gaiter		1
7	Guide Pin Gaiter		2
8	Steel Cap	34*16mm	2
9	Plug		1

12999580

PAN 17

Seals Cap Repair Kits



No.	Description	Dimension	Pcs.
1	Bolt Short	M16*1.5*70mm	1
2	Bolt Long	M16*1.5*90mm	1
3	Cover Screw	10*1*40mm	8
4	Gasket		1
5	Guide Pin Bush	34*30*20mm	3
6	Adjuster Screw Gaiter		1
7	Guide Pin Gaiter		2
8	Steel Cap	34*16mm	2
9	Seal		1
10	Plug		1

12999776

PAN 19-1 PAN 22-1

Guide Pin Repair Kit



No.	Description	Dimension	Pcs.
1	Guide Pin Short	38*76mm	1
2	Guide Pin Long	38*118mm	1
3	Bolt Short	M16*1.5*80mm	1
4	Bolt Long	M16*1.5*120mm	1
5	Guide Pin Bush	42*38*30mm	3
6	Adjuster Screw Gaiter		1
7	Guide Pin Gaiter		2
8	Steel Cap	42.5*17mm	1
9	Steel Cap	42.5*29mm	2
10	Plug		1
11	Ring	44.5*1.25mm	2

PAN 17

Caliper Pad Retainer Kit



FLX17.5W-014

PAN 17

Caliper Adjuster Mechanism



FLX16W-005 PAN 17
Caliper Brake Lever



FLX17.5W-019-L/R PAN 17
Push Plate



FLX19.5W-013 PAN 19 PAN 22
Roller Bearing



FLX19.5W-011 PAN 19 PAN 22
Caliper Gasket Seals Kit



FLX19.5W-012 PAN 19 PAN 22
Caliper Brake Lever



FLX19.5W-014 PAN 19 PAN 22
Adjuster Mechanism



FLX19.5W-010 PAN 19 PAN 22
Caliper Cover



FLX19.5W-019L/R PAN 19
Push Plate



FLX22.5W-04-L/R PAN 22
Push Plate



FLX-WBCMX-13L/R MAXX 22
Push Plate



FLX19.5W-022

PAN 19 PAN 22

Caliper Pad Retainer Kit



FLXMX22-KIT022

MAXX-22

Caliper Plug Repair Kit



No.	Code	Description	Pcs.
1	FLX-WBCMX-1-007	Manual Shaft	1
2	FLX-WBCMX-04	Plug	1
3	FLX-WBCMX-1-008	Adjuster Seal	1
4	FLX-WBCMX-1-009	Manual Gear	1

6403229262

MAXX-22

Guide Pin Repair Kit



No.	Description	Dimension	Pcs.
1	Guide Pin Short	38*76mm	1
2	Guide Pin Long	38*118mm	1
3	Bolt Short	M16*1.5*80mm	1
4	Bolt Long	M16*1.5*120mm	1
5	Guide Pin Bush	42*38*30mm	3
6	Shaft Rubber		1
7	Guide Pin Gaiter		2
8	Steel Cap	42.5*17mm	2
9	Plug		1
10	Ring	44.5*1.25mm	2

FLX-WBCMX-06

MAXX-22

Steel Cover



No.	Description	Dimension	Pcs.
1	Cover		1
2	Screw	M8*16mm	6

FLX-WBCMX-05

MAXX-22

Brake Lever



FLX-WBCMX-01

MAXX-22

Caliper Adjuster Mechanism



FLX-WBCMXXUS

MAXXUS

Caliper Adjuster Mechanism



MCK1243

ELSA2 195 ELSA2 225

Caliper Guide Repair Kits



No.	Description	Dimension	Pcs.
1	Guide Short Pin	31*83.5mm	1
2	Guide Long Pin	35*144mm	1
3	Short Bolt	M18*1.5*90mm	1
4	Long Bolt	M18*1.5*150mm	1
5	Pin Bush	39*35*30mm	2
6	Dust Excluder Retainer	42*14mm	2
7	Bronze Oval Bush	42*33*30mm	1
8	Steel Cap	44*28mm	2
9	Guide Boot		2
10	Bridge Bolts	M16*1.5*40mm	4
11	Bolt	M10*1.25*20mm	1

MCK1298

ELSA2 195 ELSA2 225

Caliper Guide Repair Kits



No.	Description	Dimension	Pcs.
1	Guide Short Pin	31*77.5mm	1
2	Guide Long Pin	35*117mm	1
3	Short Bolt	M18*1.5*82mm	1
4	Long Bolt	M18*1.5*120mm	1
5	Pin Bush	39*35*30mm	2
6	Bronze Oval Bush	42*33*30mm	1
7	Guide Boot		2
8	Steel Cap	44*20mm	2
9	Dust Excluder Retainer	40*11.5mm	2
10	Bolt	M14*1.5*40mm	4
11	Bolt	M16*1.5*40mm	4

MCK1289

ELSA2 195 ELSA2 225

Caliper Guide Repair Kits



No.	Description	Dimension	Pcs.
1	Guide Short Pin	31*83.5mm	1
2	Guide Long Pin	35*144mm	1
3	Short Bolt	M18*1.5*90mm	1
4	Long Bolt	M18*1.5*150mm	1
5	Pin Bush	39*35*30mm	2
6	Dust Excluder Retainer	42*14mm	2
7	Metal Rubber Bush	42*31*45mm	1
8	Steel Cap	44*28mm	2
9	Guide Boot		2
10	Bridge Bolts	M16*1.5*40mm	4
11	Bolt	M10*1.25*20mm	1

MCK1086

ELSA2 195 ELSA2 225

Caliper Guide Repair Kits



No.	Description	Dimension	Pcs.
1	Guide Short Pin	35*33*66.5mm	1
2	Guide Long Pin	35*128.5mm	1
3	Short Bolt	M20*1.5*90mm	1
4	Long Bolt	M20*1.5*150mm	1
5	Pin Bush	39*35*30mm	3
6	Guide Boot		2
7	Dust Excluder Retainer	42*14mm	2
8	Dust Excluder Retainer	42.5*2.5mm	2
9	Steel Cap	44*28mm	2
10	Bridge Bolts	M16*1.5*40mm	4
11	Bolt	M10*1.25*20mm	1

MCK1254

ELSA2 195 ELSA2 225

Caliper Guide Repair Kits



No.	Description	Dimension	Pcs.
1	Guide Short Pin	31*77.5mm	1
2	Guide Long Pin	35*117mm	1
3	Short Bolt	M18*1.5*82mm	1
4	Long Bolt	M18*1.5*120mm	1
5	Pin Bush	39*35*30mm	2
6	Bronze Oval Bush	42*33*30mm	1
7	Guide Boot		2
8	Steel Cap	44*20mm	2
9	Dust Excluder Retainer	40*11.5mm	2
10	Bolt	M14*1.5*40mm	4

MCK1317

ELSA2 195 ELSA2 225

Caliper Guide Repair Kits



No.	Description	Dimension	Pcs.
1	Guide Long Pin	35*117mm	1
2	Guide Long Pin	31*117mm	1
3	Long Bolt	M18*1.5*120mm	2
4	Pin Bush	39*35*30mm	2
5	Guide Boot		2
6	Bronze Oval Bush	42*33*30mm	2
7	Steel Cap	44*20mm	2
8	Bridge Bolt	M16*1.5*40mm	4
9	Dust Excluder Retainer	40*11.5mm	2
10	Bolt	M10*1.25*20mm	1

SJ4112

ELSA2 195 ELSA2 225

Roller Bearing Set



No.	Description	Dimension	Pcs.
1	Roller Bearing Set		2
2	Lever Bush		2
3	Roller		2

MCK1309

ELSA2 195 ELSA2 225

Tappet Dust Rubber Set



No.	Description	Dimension	Pcs.
1	Tappet Dust Cover		2
2	Piston Head		2
3	Piston Head Ring	34*32*6.5mm	2

SJ4077

ELSA2 195 ELSA2 225

Guide Boot



MCK1139

ELSA2 195 ELSA2 225

Tappet Rubber



ELSA203

ELSA2 195 ELSA2 225

Roller Bearing Set



ELSA204

ELSA2 195 ELSA2 225

Bearing Seat



ELSA206

ELSA2 195 ELSA2 225

Lever Bushing Kit

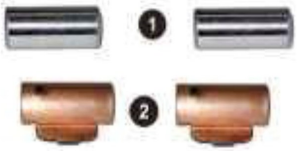

No.	Description	Dimension	Pcs.
1	Roller		2
2	Lever Bush		2

MCK1174

ELSA2 195 ELSA2 225

Pads Retainer Repair Kits



No.	Description	Dimension	Pcs.
1	Balata Holder	M10*1.25*20mm	1
2	Bolt		1

ELSA207

ELSA2 195 ELSA2 225

Adjuster Mechanism



No.	Description	Dimension	Pcs.
1	Adjuster Mechanism		1
2	Bolt	M8*45mm	8
3	Gasket		1

ELSA210

ELSA2 195 ELSA2 225

Adjuster Cover Set



No.	Description	Dimension	Pcs.
1	Cover		1
2	Gasket		1
3	Bolt	M8*45mm	8

ELSA1901

ELSA2 195 ELSA2 225

Adjuster Mechanism



No.	Description	Dimension	Pcs.
1	Adjuster Mechanism		1
2	Bolt	M8*45mm	8
3	Gasket		1

ELSA1901-1

ELSA2 195 ELSA2 225

Adjuster Mechanism



No.	Description	Dimension	Pcs.
1	Cover		1
2	Bolt	M8*45mm	8
3	Gasket		1

FLX-22.5M-014

ELSA2 195 ELSA2 225

Brake Lever Radial



ELSA205

ELSA2 195 ELSA2 225

Brake Lever



ELSA208
ELSA2 195 ELSA2 225

Adjuster Mechanism Unit



ELSA210-2
ELSA2 195 ELSA2 225

Gasket



ELSA215
ELSA2 195 ELSA2 225

Calibration Thread Unit



ELSA1902
ELSA2 195 ELSA2 225

Manual Adjuster Gear



ELSA217
ELSA2 195 ELSA2 225

Manual Adjuster Gear Right



ELSA216
ELSA2 195 ELSA2 225

Manual Adjuster Gear Left



ELSA1901-2
ELSA2 195 ELSA2 225

Gasket



ELSA1903A
ELSA2 195 ELSA2 225

Brake Lever



ELSA211
ELSA2 195 ELSA2 225

Bushing



No.	Description	Dimension	Pcs.
1	Teflon Bushing		2
2	Dust Excluder Retainer		2
3	Seal		2

MCK1118

DUCO

Caliper Guide Repair Kits



No.	Description	Dimension	Pcs.
1	Guide Pin	35*102mm	2
2	Bolt	M20*2*124mm	2
3	Bronze Oval Bush	35*39*30mm	2
4	Dust Excluder Retainer	40*11.5mm	2
5	Plastic Bush	39*35*76.5mm	1
6	Guide Boot		2
7	Steel Cap	40*20mm	2

MCK1135

DUCO

Caliper Guide Repair Kits



No.	Description	Dimension	Pcs.
1	Pin Bolt	M20*2*125mm	2
2	Guide Pin	35*102mm	2
3	Dust Excluder Retainer	37*40*11mm	2
4	Fiber Bush	35*39*38	2
5	Steel Cap	40*18.5mm	2
6	Pin Bush	35*39*30mm	2
7	Guide Boot		2

MCK1237

DUCO

Caliper Guide Repair Kits



No.	Description	Dimension	Pcs.
1	Tappet Rubber		2
2	Mechanism Right		2
3	Piston Head Circlip		2
4	Plastic Bush	49*45*30mm	2
5	Piston Head		2
6	Dust Excluder Retainer	63.5*11.5mm	2

MCK1236

DUCO

Caliper Guide Repair Kits



No.	Description	Dimension	Pcs.
1	Tappet Rubber		2
2	Mechanism Left		2
3	Piston Head Circlip		2
4	Plastic Bush	49*45*30mm	2
5	Piston Head		2
6	Dust Excluder Retainer	63.5*11.5mm	2

MCK1111

DUCO

Adjuster Mechanism Left



MCK1113

DUCO

Adjuster Mechanism Front



MCK1112

DUCO

Adjuster Mechanism Right



68322900PK10

DUCO

Rotation Plate



MCK1067

DUCO

Gear Spring Kit



TDUCO-01-L/R

DUCO

Brake Lever



MCK1116

DUCO

Caliper Guide Repair Kits



No.	Description	Dimension	Pcs.
1	Guide Short Pin	35*60mm	1
2	Guide Long Pin	35*102mm	1
3	Short Bolt	M20*2*83mm	1
4	Long Bolt	M20*2*124mm	1
5	Bronze Oval Bush	35*39*30mm	1
6	Dust Excluder Retainer	40*11.5mm	2
7	Plastic Bush	39*35*76.5mm	1
8	Guide Boot		2
9	Steel Cap	40*20mm	2

MCK1041

DUCO

Gasket Set



No.	Description	Dimension	Pcs.
1	Gasket		1
2	Actuator Seal		1
3	Adjuster Dust Cover		1
4	Adjuster Seal		1

MCK1238

DUCO

Tappet Repair Kits



No.	Description	Dimension	Pcs.
1	Tappet Rubber		2
2	Piston Head Circlip		2
3	Piston Head		2

SJ4105

DUCO

Gasket Set



No.	Description	Dimension	Pcs.
1	Gasket		1
2	Actuator Seal		1
3	Adjuster Dust Cover		1
4	Adjuster Seal		1

SJ4109

DUCO

Gasket Set



No.	Description	Dimension	Pcs.
1	Gasket		1
2	Actuator Seal		1
3	Adjuster Dust Cover		1
4	Adjuster Seal		1

MCK1171

DX195

Caliper Guide Repair Kits



No.	Description	Dimension	Pcs.
1	Guide Pin Long	32*97.5mm	1
2	Guide Pin Long	32*97.5mm	1
3	Bolt Long	M16*1.5*80mm	1
4	Bolt Short	M16*1.5*55mm	1
5	Steel Cap	37*15mm	1
6	Steel Cap	42*29mm	2
7	Seal		2
8	Piston Dust Excluder		2
9	Guide Pin Dust Excluder		2
10	Plain Bush	36*32*55mm	2
11	Gasket		1
12	Cover Plate Screw	M8*1.25*20mm	2
13	Washer	19*13mm	1
14	Plate Screw	M12*1.75*23mm	2
15	Plate Screw	M12*1.75*29	4
16	Plug Screw		1
17	Piston Screw	M10*1.5*20mm	2

MCK1172

DX195

Caliper Guide Repair Kits



No.	Description	Dimension	Pcs.
1	Guide Pin Long	35*98mm	1
2	Long Bolt	M18*2.5*90mm	1
3	Guide Pin Long	35*98mm	1
4	Short Bolt	M18*2.5*55.8mm	1
5	Steel Cap	37*15mm	1
6	Steel Cap	42*31mm	2
7	Seal		2
8	Piston Dust Excluder		2
9	Guide Pin Dust Excluder		2
10	Plain Bush	39.3*35*50mm	2
11	Gasket		1
12	Cover Plate Screw	M8*1.25*20mm	2
13	Washer	19*13mm	1
14	Plate Screw	M12*1.75*23mm	2
15	Plate Screw	M12*1.75*29	4
16	Plug Screw		1
17	Piston Screw	M10*1.5*20mm	2

MCK1102

ELSA1

Caliper Guide Repair Kits



No.	Description	Dimension	Pcs.
1	Guide Short Pin	35*73mm	1
2	Guide Long Pin	35*135mm	1
3	Short Bolt	M20*1.5*90mm	1
4	Long Bolt	M20*1.5*150mm	1
5	Pin Bush	39*35*30mm	2
6	Bronze Oval Bush	40*35.3/37.3*32.5mm	1
7	Guide Boot		2
8	Dust Excluder Retainer	39*15mm	1
9	Dust Excluder Retainer	40*15mm	1
10	Dust Excluder Retainer	48*13.5mm	2
11	Steel Cap	44*27mm	1

MCK1103

ELSA1

Caliper Guide Repair Kits



No.	Description	Dimension	Pcs.
1	Guide Pin With Bolt End	28.5*85mm	1
2	Guide Long Pin	35*135mm	1
3	Pin Bush	39*35*30mm	2
4	Long Bolt	M20*1.5*150mm	1
5	Dust Excluder Retainer	40*19.3mm	1
6	Dust Excluder Retainer	39*15mm	1
7	Rubber Bush	40*29*27mm	1
8	Guide Boot		2
9	Steel Cap	44*27mm	2

TALDEX-01
Adjuster complete



TALDEX-KIT001
Guide Pin Repair kits



91011
Rubber Repair kits



FLX-BP-03
Adjuster complete



FLX22.5-DA03-01
Adjuster complete



FLX-Z3-02
Adjuster complete



FLX-Z3-KIT001
Caliper Repair Kit



FLX22.5Z3-3501-04
Brake Lever



FLEETX®

THANK YOU

For choosing FleetX premium heavy-duty brake calipers & components — built for strength, precision engineered, and backed by OEM-grade quality on every part number in this catalogue.

www.fleetxparts.com

sales@fleetxparts.com

+1-905-737-4060

TECHLINK INDUSTRIES CORPORATION

MANUFACTURER OF FLEETX PREMIUM HEAVY DUTY PARTS



© TECHLINK INDUSTRIES CORPORATION — ALL RIGHTS RESERVED — FLEETX® BRAKE CALIPER CATALOGUE