HEAVY-DUTY WHEEL SYSTEMS

# FLEETX®

## STEEL & ALUMINIUM WHEEL PRODUCT CATALOGUE

**2026 EDITION**



**ENGINEERED FOR PERFORMANCE. BUILT FOR THE LONG HAUL.**

Serving fleets, dealers & service shops across Canada

FLEETX®

WHEEL
SYSTEMS

# BUILT FOR THE FLEETS THAT NEVER STOP.

FleetX steel and aluminium wheels are manufactured to strict dimensional and load tolerances, giving fleet operators, dealers and service shops a dependable wheel-end platform they can standardize on. Every wheel in this catalogue is cross-referenced to industry-standard interchange numbers for fast, confident sourcing.

### PRECISION FIT

Hub-piloted, dual-mount designs held to tight bolt-circle and center-bore tolerances for a secure, repeatable fit every time.

### RATED & PROVEN

Published max load ratings and PSI cross-referenced to leading OEM interchange numbers for confident, worry-free sourcing.

### FAST DELIVERY

A lean Canadian stocking model built to keep your fleet moving without downtime or long backorder waits.

### BUILT ON TRUST

Business dealings grounded in integrity, honesty and responsive customer support from first call to final delivery.

*“Satisfied customers are the foundation of our business.”*

**WHY FLEETX**

Precision engineered wheel-end products for North America's toughest duty cycles.

# TABLE OF CONTENTS

Steel & Aluminium Wheel Product Line


**Why FleetX** ..... 02

**STEEL WHEELS — Section 4** ..... 04

- 67402 — 22.5x8.25 15% Steel ..... 05
- 67405 — 22.5x8.25 15% Steel ..... 06
- 67410 — 22.5x8.25 15% Steel ..... 07
- 67502 — 24.5x8.25 15% Steel ..... 08
- 67505 — 24.5x8.25 15% Steel ..... 09
- 67510 — 24.5x8.25 15% Steel ..... 10
- 67602 — 22.5x8.25 15% Steel ..... 11
- 67802 — 22.5x9.00 15% Steel ..... 12
- 67805 — 22.5x9.00 15% Steel ..... 13
- 67604 — 17.5x6.75 HC Steel ..... 14

**ALUMINIUM WHEELS — Section 15** ..... 15

- 67640 — 22.5x8.25 15% Aluminium ..... 16
- 67645 — 22.5x8.25 15% Aluminium ..... 17
- 67685 — 22.5x8.25 15% Aluminium ..... 18
- 67655 — 24.5x8.25 15% Aluminium ..... 19
- 67695 — 24.5x8.25 15% Aluminium ..... 20
- 67758 — 22.5x9.00 15% Aluminium ..... 21
- 67175 — 22.5x11.75 15% Aluminium ..... 22
- 67378 — 22.5x12.25 15% Aluminium ..... 23
- 67503 — 17.5x6.75 HC Aluminium ..... 24

SECTION 04

# STEEL WHEELS



FLEETX®

# #67402

# FleetX 22.5x8.25 15% Tubeless Steel Wheel, Hub-Piloted, Dual-Mounting, Two Piece Flange Nut



PRODUCT REPRESENTATION

**MATERIAL: STEEL**

TUBELESS · HUB-PILOTED · DUAL-MOUNT

## KEY FEATURES

- **Tubeless**
  Tubeless design for a simplified, reliable air seal
- **Hub-Piloted**
  Hub-piloted centering for precise, secure wheel installation
- **Dual-Mounting**
  Dual-mount capable for steer, drive & trailer positions
- **Two Piece Flange Nut**
  Two-piece flange nut hardware for a durable clamp load

## TECHNICAL SPECIFICATION

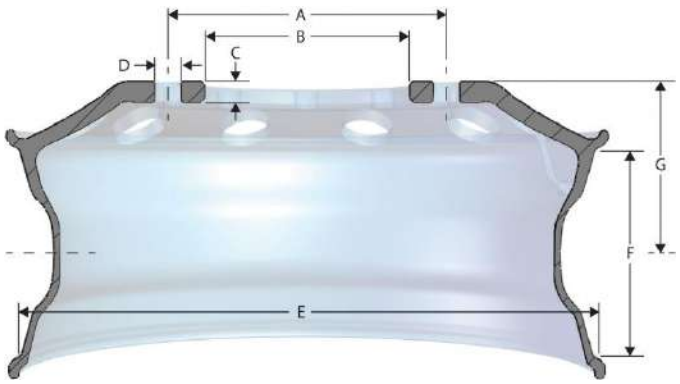


*Typical wheel shown — dimensional reference only*

| | | | |
|---|---|---|---|
| **A** | **BOLT CIRCLE**<br>285.75 mm | **B** | **CENTER BORE**<br>220.00 mm |
| **C** | **DISC THICKNESS**<br>0.437 | **D** | **BOLT HOLE SIZE**<br>26mm |
| **E** | **WHEEL DIAMETER**<br>22.5 | **F** | **WHEEL WIDTH**<br>8.25 |
| **G** | **OFFSET**<br>6.60 | | |

**BOLT HOLES:** 10

**HAND HOLE:** 2

**MAX LOAD:** 7400 - 120

**INTERCHANGE:** Accuride 51408

**NEED THIS PART?**
*Contact our team to confirm stock & pricing on #67402.*

# #67405

# FleetX 22.5x8.25 15% Tubeless Steel Wheel, Hub-Piloted, Dual-Mounting, Two Piece Flange Nut



PRODUCT REPRESENTATION

**MATERIAL: STEEL**

TUBELESS · HUB-PILOTED · DUAL-MOUNT

## KEY FEATURES

- **Tubeless**
  Tubeless design for a simplified, reliable air seal
- **Hub-Piloted**
  Hub-piloted centering for precise, secure wheel installation
- **Dual-Mounting**
  Dual-mount capable for steer, drive & trailer positions
- **Two Piece Flange Nut**
  Two-piece flange nut hardware for a durable clamp load

## TECHNICAL SPECIFICATION

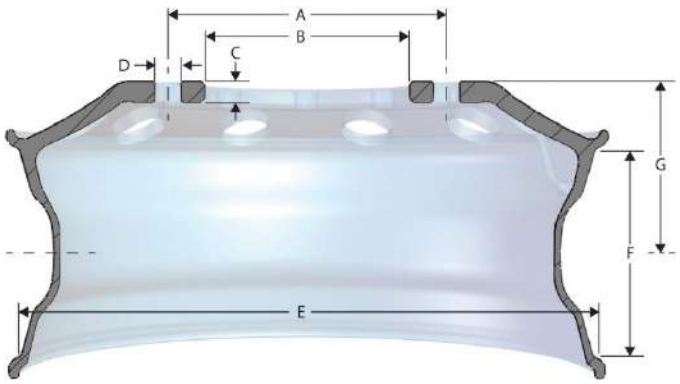


*Typical wheel shown — dimensional reference only*

| | | | |
|---|---|---|---|
| **A** | **BOLT CIRCLE**<br>285.75 mm | **B** | **CENTER BORE**<br>220.00 mm |
| **C** | **DISC THICKNESS**<br>0.437 | **D** | **BOLT HOLE SIZE**<br>26mm |
| **E** | **WHEEL DIAMETER**<br>22.5 | **F** | **WHEEL WIDTH**<br>8.25 |
| **G** | **OFFSET**<br>6.60 | | |

**BOLT HOLES:** 10

**HAND HOLE:** 5

**MAX LOAD:** 7400 - 120

**INTERCHANGE:** Accuride 51487

**NEED THIS PART?**
*Contact our team to confirm stock & pricing on #67405.*

# #67410

# FleetX 22.5x8.25 15% Tubeless Steel Wheel, Hub-Piloted, Dual-Mounting, Two Piece Flange Nut



PRODUCT REPRESENTATION

**MATERIAL: STEEL**

TUBELESS · HUB-PILOTED · DUAL-MOUNT

## KEY FEATURES

- **Tubeless**
  Tubeless design for a simplified, reliable air seal
- **Hub-Piloted**
  Hub-piloted centering for precise, secure wheel installation
- **Dual-Mounting**
  Dual-mount capable for steer, drive & trailer positions
- **Two Piece Flange Nut**
  Two-piece flange nut hardware for a durable clamp load

## TECHNICAL SPECIFICATION

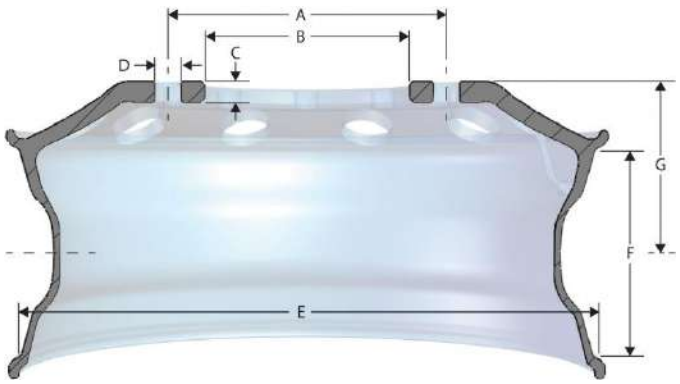


*Typical wheel shown — dimensional reference only*

| | | | |
|---|---|---|---|
| **A** | **BOLT CIRCLE**<br>285.75 mm | **B** | **CENTER BORE**<br>220.00 mm |
| **C** | **DISC THICKNESS**<br>0.437 | **D** | **BOLT HOLE SIZE**<br>26mm |
| **E** | **WHEEL DIAMETER**<br>22.5 | **F** | **WHEEL WIDTH**<br>8.25 |
| **G** | **OFFSET**<br>6.60 | | |

**BOLT HOLES:** 10

**HAND HOLE:** 10

**MAX LOAD:** 7400 - 120

**INTERCHANGE:** Accuride 51637

**NEED THIS PART?**
*Contact our team to confirm stock & pricing on #67410.*

# #67502

# FleetX 24.5x8.25 15% Tubeless Steel Wheel, Hub-Piloted, Dual-Mounting, Two Piece Flange Nut



PRODUCT REPRESENTATION

**MATERIAL: STEEL**

TUBELESS · HUB-PILOTED · DUAL-MOUNT

## KEY FEATURES

- **Tubeless**
  Tubeless design for a simplified, reliable air seal
- **Hub-Piloted**
  Hub-piloted centering for precise, secure wheel installation
- **Dual-Mounting**
  Dual-mount capable for steer, drive & trailer positions
- **Two Piece Flange Nut**
  Two-piece flange nut hardware for a durable clamp load

## TECHNICAL SPECIFICATION

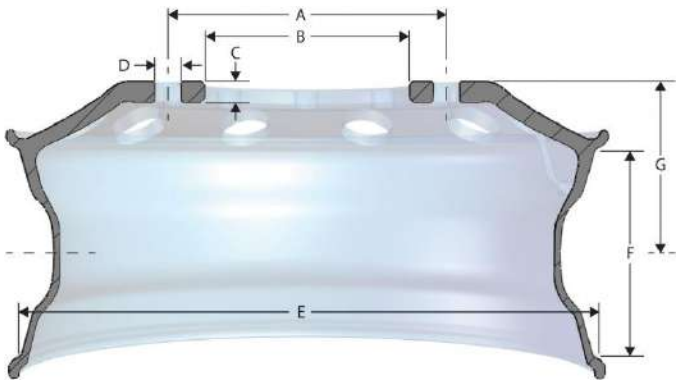


*Typical wheel shown — dimensional reference only*

| | | | |
|---|---|---|---|
| **A** | **BOLT CIRCLE**<br>285.75 mm | **B** | **CENTER BORE**<br>220.00 mm |
| **C** | **DISC THICKNESS**<br>0.437 | **D** | **BOLT HOLE SIZE**<br>26mm |
| **E** | **WHEEL DIAMETER**<br>24.5 | **F** | **WHEEL WIDTH**<br>8.25 |
| **G** | **OFFSET**<br>6.60 | | |

**BOLT HOLES:** 10

**HAND HOLE:** 2

**MAX LOAD:** 7400 - 120

**INTERCHANGE:** Accuride 51409

**NEED THIS PART?**
*Contact our team to confirm stock & pricing on #67502.*

# #67505

# FleetX 24.5x8.25 15% Tubeless Steel Wheel, Hub-Piloted, Dual-Mounting, Two Piece Flange Nut



PRODUCT REPRESENTATION

**MATERIAL: STEEL**

TUBELESS · HUB-PILOTED · DUAL-MOUNT

## KEY FEATURES

- **Tubeless**
  Tubeless design for a simplified, reliable air seal
- **Hub-Piloted**
  Hub-piloted centering for precise, secure wheel installation
- **Dual-Mounting**
  Dual-mount capable for steer, drive & trailer positions
- **Two Piece Flange Nut**
  Two-piece flange nut hardware for a durable clamp load

## TECHNICAL SPECIFICATION

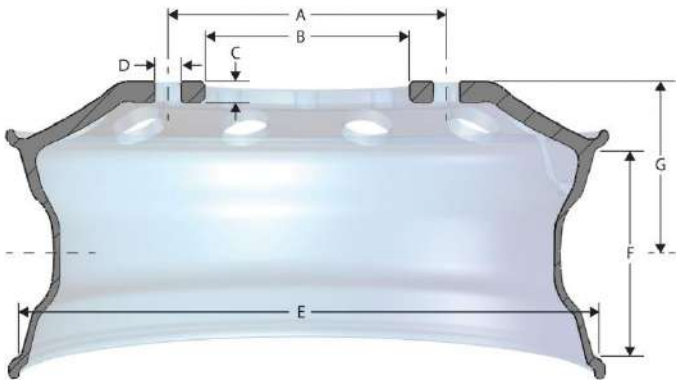


*Typical wheel shown — dimensional reference only*

| | | | |
|---|---|---|---|
| **A** | **BOLT CIRCLE**<br>285.75 mm | **B** | **CENTER BORE**<br>220.00 mm |
| **C** | **DISC THICKNESS**<br>0.437 | **D** | **BOLT HOLE SIZE**<br>26mm |
| **E** | **WHEEL DIAMETER**<br>24.5 | **F** | **WHEEL WIDTH**<br>8.25 |
| **G** | **OFFSET**<br>6.60 | | |

**BOLT HOLES:** 10

**HAND HOLE:** 5

**MAX LOAD:** 7400 - 120

**INTERCHANGE:** Accuride 51641

**NEED THIS PART?**
*Contact our team to confirm stock & pricing on #67505.*

# #67510

# FleetX 24.5x8.25 15% Tubeless Steel Wheel, Hub-Piloted, Dual-Mounting, Two Piece Flange Nut



PRODUCT REPRESENTATION

**MATERIAL: STEEL**

TUBELESS · HUB-PILOTED · DUAL-MOUNT

## KEY FEATURES

- **Tubeless**
  Tubeless design for a simplified, reliable air seal
- **Hub-Piloted**
  Hub-piloted centering for precise, secure wheel installation
- **Dual-Mounting**
  Dual-mount capable for steer, drive & trailer positions
- **Two Piece Flange Nut**
  Two-piece flange nut hardware for a durable clamp load

## TECHNICAL SPECIFICATION

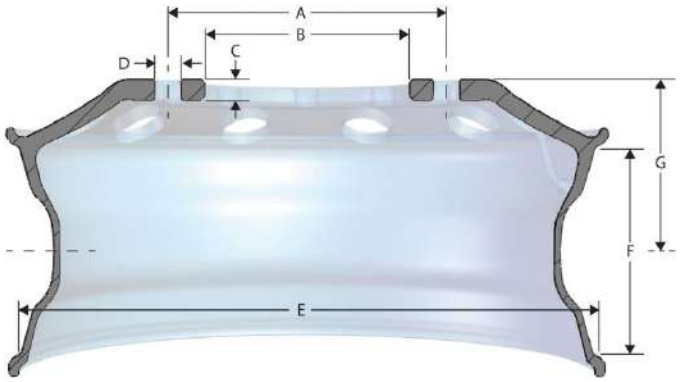


*Typical wheel shown — dimensional reference only*

| | | | |
|---|---|---|---|
| **A** | **BOLT CIRCLE**<br>285.75 mm | **B** | **CENTER BORE**<br>220.00 mm |
| **C** | **DISC THICKNESS**<br>0.437 | **D** | **BOLT HOLE SIZE**<br>26mm |
| **E** | **WHEEL DIAMETER**<br>24.5 | **F** | **WHEEL WIDTH**<br>8.25 |
| **G** | **OFFSET**<br>6.62 | | |

**BOLT HOLES:** 10

**HAND HOLE:** 10

**MAX LOAD:** 7400 - 120

**INTERCHANGE:** Accuride 29545

**NEED THIS PART?**
*Contact our team to confirm stock & pricing on #67510.*

# #67602

# FleetX 22.5x8.25 15% Tubeless Steel Wheel, Hub-Piloted, Dual-Mounting, Two Piece Flange Nut



PRODUCT REPRESENTATION

**MATERIAL: STEEL**

TUBELESS · HUB-PILOTED · DUAL-MOUNT

## KEY FEATURES

- **Tubeless**
  Tubeless design for a simplified, reliable air seal
- **Hub-Piloted**
  Hub-piloted centering for precise, secure wheel installation
- **Dual-Mounting**
  Dual-mount capable for steer, drive & trailer positions
- **Two Piece Flange Nut**
  Two-piece flange nut hardware for a durable clamp load

## TECHNICAL SPECIFICATION

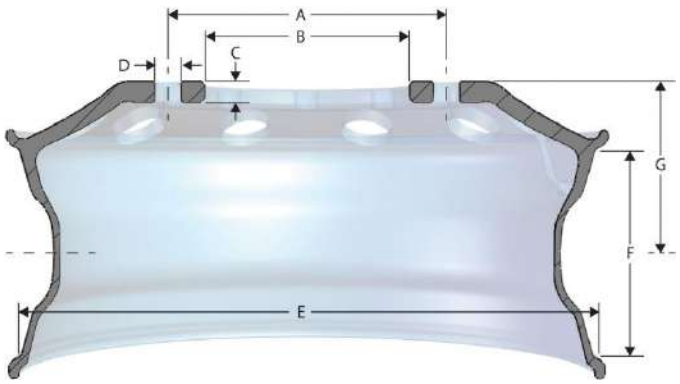


*Typical wheel shown — dimensional reference only*

| | | | |
|---|---|---|---|
| **A** | **BOLT CIRCLE**<br>285.75 mm | **B** | **CENTER BORE**<br>220.00 mm |
| **C** | **DISC THICKNESS**<br>0.472 | **D** | **BOLT HOLE SIZE**<br>26mm |
| **E** | **WHEEL DIAMETER**<br>22.5 | **F** | **WHEEL WIDTH**<br>8.25 |
| **G** | **OFFSET**<br>6.62 | | |

**BOLT HOLES:** 10

**HAND HOLE:** 2

**MAX LOAD:** 8000 - 130

**INTERCHANGE:** Accuride 28828

**NEED THIS PART?**
*Contact our team to confirm stock & pricing on #67602.*

# #67802

# FleetX 22.5x9.00 15% Tubeless Steel Wheel, Hub-Piloted, Dual-Mounting, Two Piece Flange Nut



PRODUCT REPRESENTATION

**MATERIAL: STEEL**

TUBELESS · HUB-PILOTED · DUAL-MOUNT

## KEY FEATURES

- **Tubeless**
  Tubeless design for a simplified, reliable air seal
- **Hub-Piloted**
  Hub-piloted centering for precise, secure wheel installation
- **Dual-Mounting**
  Dual-mount capable for steer, drive & trailer positions
- **Two Piece Flange Nut**
  Two-piece flange nut hardware for a durable clamp load

## TECHNICAL SPECIFICATION

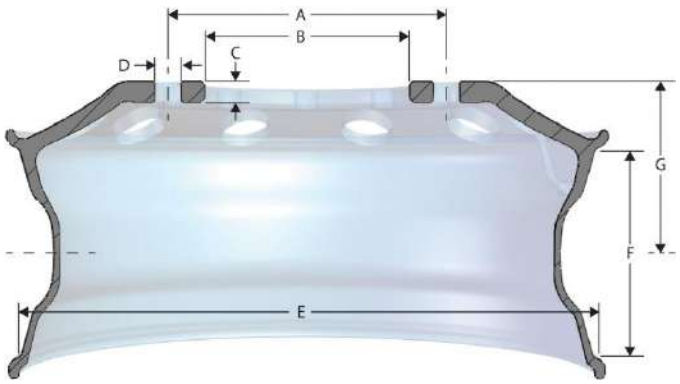


*Typical wheel shown — dimensional reference only*

| | | | |
|---|---|---|---|
| **A** | **BOLT CIRCLE**<br>285.75 mm | **B** | **CENTER BORE**<br>220.00 mm |
| **C** | **DISC THICKNESS**<br>0.500 | **D** | **BOLT HOLE SIZE**<br>26mm |
| **E** | **WHEEL DIAMETER**<br>22.5 | **F** | **WHEEL WIDTH**<br>9.00 |
| **G** | **OFFSET**<br>7.00 | | |

**BOLT HOLES:** 10

**HAND HOLE:** 2

**MAX LOAD:** 10000 - 130

**INTERCHANGE:** Accuride 29300

**NEED THIS PART?**
*Contact our team to confirm stock & pricing on #67802.*

# #67805

# FleetX 22.5x9.00 15% Tubeless Steel Wheel, Hub-Piloted, Dual-Mounting, Two Piece Flange Nut



PRODUCT REPRESENTATION

**MATERIAL: STEEL**

TUBELESS · HUB-PILOTED · DUAL-MOUNT

## KEY FEATURES

- **Tubeless**
  Tubeless design for a simplified, reliable air seal
- **Hub-Piloted**
  Hub-piloted centering for precise, secure wheel installation
- **Dual-Mounting**
  Dual-mount capable for steer, drive & trailer positions
- **Two Piece Flange Nut**
  Two-piece flange nut hardware for a durable clamp load

## TECHNICAL SPECIFICATION

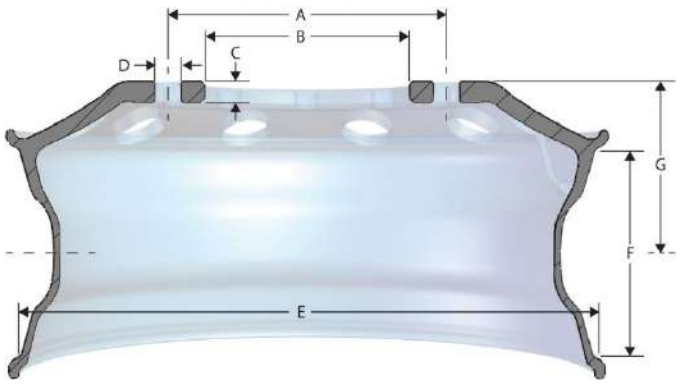


*Typical wheel shown — dimensional reference only*

| | | | |
|---|---|---|---|
| **A** | **BOLT CIRCLE**<br>285.75 mm | **B** | **CENTER BORE**<br>220.00 mm |
| **C** | **DISC THICKNESS**<br>0.500 | **D** | **BOLT HOLE SIZE**<br>26mm |
| **E** | **WHEEL DIAMETER**<br>22.5 | **F** | **WHEEL WIDTH**<br>9.00 |
| **G** | **OFFSET**<br>7.00 | | |

**BOLT HOLES:** 10

**HAND HOLE:** 5

**MAX LOAD:** 10000 - 130

**INTERCHANGE:** Accuride 50300

**NEED THIS PART?**
*Contact our team to confirm stock & pricing on #67805.*

# #67604

# FleetX 17.5x6.75 HC Tubeless Steel Wheel, Hub-Piloted, Dual-Mounting, Two Piece Flange Nut



PRODUCT REPRESENTATION

**MATERIAL: STEEL**

TUBELESS · HUB-PILOTED · DUAL-MOUNT

## KEY FEATURES

- **Tubeless**
  Tubeless design for a simplified, reliable air seal
- **Hub-Piloted**
  Hub-piloted centering for precise, secure wheel installation
- **Dual-Mounting**
  Dual-mount capable for steer, drive & trailer positions
- **Two Piece Flange Nut**
  Two-piece flange nut hardware for a durable clamp load

## TECHNICAL SPECIFICATION

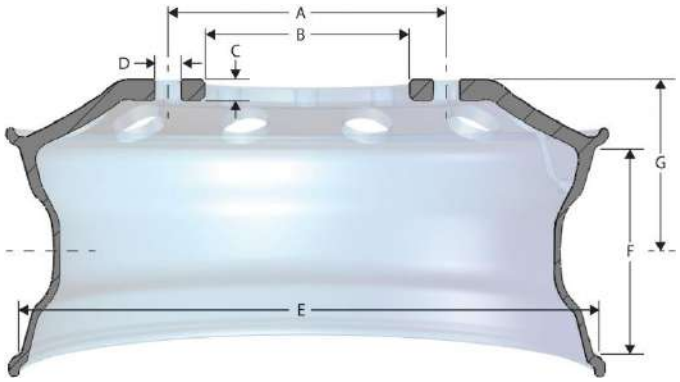


*Typical wheel shown — dimensional reference only*

| | | | |
|---|---|---|---|
| **A** | **BOLT CIRCLE**<br>275.00 mm | **B** | **CENTER BORE**<br>221.00 mm |
| **C** | **DISC THICKNESS**<br>0.437 | **D** | **BOLT HOLE SIZE**<br>26mm |
| **E** | **WHEEL DIAMETER**<br>17.5 | **F** | **WHEEL WIDTH**<br>6.75 HC |
| **G** | **OFFSET**<br>5.60 | | |

**BOLT HOLES:** 8

**HAND HOLE:** 4

**MAX LOAD:** 5675 - 125

**INTERCHANGE:** Accuride 28656

**NEED THIS PART?**
*Contact our team to confirm stock & pricing on #67604.*

SECTION 15

# ALUMINIUM WHEELS



FLEETX®

# #67640

# FleetX 22.5x8.25 15% Tubeless Aluminium Wheel, Hub-Piloted, Dual-Mounting, Two Piece Flange Nut



PRODUCT REPRESENTATION

**MATERIAL: ALUMINIUM**
**WEIGHT: 40 LBS**

## KEY FEATURES

- **Tubeless**
  Tubeless design for a simplified, reliable air seal
- **Hub-Piloted**
  Hub-piloted centering for precise, secure wheel installation
- **Dual-Mounting**
  Dual-mount capable for steer, drive & trailer positions
- **Two Piece Flange Nut**
  Two-piece flange nut hardware for a durable clamp load

## TECHNICAL SPECIFICATION

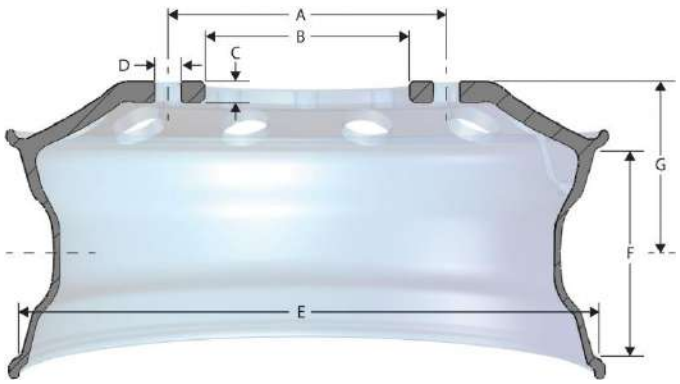


*Typical wheel shown — dimensional reference only*

| | | | |
|---|---|---|---|
| **A** | **BOLT CIRCLE**<br>285.75 mm | **B** | **CENTER BORE**<br>220.00 mm |
| **C** | **DISC THICKNESS**<br>0.750 | **D** | **BOLT HOLE SIZE**<br>26mm |
| **E** | **WHEEL DIAMETER**<br>22.5 | **F** | **WHEEL WIDTH**<br>8.25 |
| **G** | **OFFSET**<br>6.59 | | |

**BOLT HOLES:** 10

**HAND HOLE:** 10

**MAX LOAD:** 7400 - 131

**INTERCHANGE:** Accuride 43644

**NEED THIS PART?**
*Contact our team to confirm stock & pricing on #67640.*

# #67645

# FleetX 22.5x8.25 15% Tubeless Aluminium Wheel, Hub-Piloted, Dual-Mounting, Two Piece Flange Nut



PRODUCT REPRESENTATION

**MATERIAL: ALUMINIUM**
**WEIGHT: 45 LBS**

## KEY FEATURES

- **Tubeless**
  Tubeless design for a simplified, reliable air seal
- **Hub-Piloted**
  Hub-piloted centering for precise, secure wheel installation
- **Dual-Mounting**
  Dual-mount capable for steer, drive & trailer positions
- **Two Piece Flange Nut**
  Two-piece flange nut hardware for a durable clamp load

## TECHNICAL SPECIFICATION

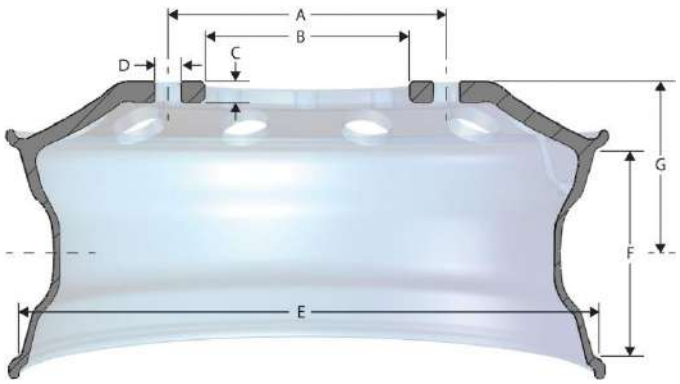


*Typical wheel shown — dimensional reference only*

| | | | |
|---|---|---|---|
| **A** | **BOLT CIRCLE**<br>285.75 mm | **B** | **CENTER BORE**<br>220.00 mm |
| **C** | **DISC THICKNESS**<br>0.866 | **D** | **BOLT HOLE SIZE**<br>26mm |
| **E** | **WHEEL DIAMETER**<br>22.5 | **F** | **WHEEL WIDTH**<br>8.25 |
| **G** | **OFFSET**<br>6.61 | | |

**BOLT HOLES:** 10

**HAND HOLE:** 10

**MAX LOAD:** 7400 - 131

**INTERCHANGE:** Accuride 41644

**NEED THIS PART?**
*Contact our team to confirm stock & pricing on #67645.*

# #67685 FleetX 22.5x8.25 15% Tubeless Aluminium Wheel, Hub-Piloted, Dual-Mounting, Two Piece Flange Nut



PRODUCT REPRESENTATION

**MATERIAL: ALUMINIUM**
**WEIGHT: 50 LBS**

## KEY FEATURES

- **Tubeless**
  Tubeless design for a simplified, reliable air seal
- **Hub-Piloted**
  Hub-piloted centering for precise, secure wheel installation
- **Dual-Mounting**
  Dual-mount capable for steer, drive & trailer positions
- **Two Piece Flange Nut**
  Two-piece flange nut hardware for a durable clamp load

## TECHNICAL SPECIFICATION

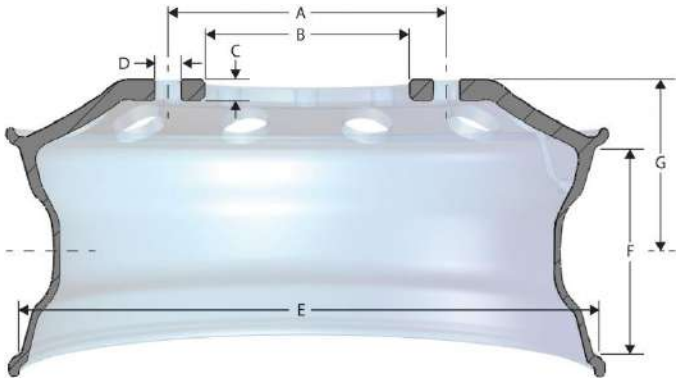


*Typical wheel shown — dimensional reference only*

| | | | |
|---|---|---|---|
| **A** | **BOLT CIRCLE**<br>285.75 mm | **B** | **CENTER BORE**<br>220.00 mm |
| **C** | **DISC THICKNESS**<br>0.935 | **D** | **BOLT HOLE SIZE**<br>26mm |
| **E** | **WHEEL DIAMETER**<br>22.5 | **F** | **WHEEL WIDTH**<br>8.25 |
| **G** | **OFFSET**<br>6.59 | | |

**BOLT HOLES:** 10

**HAND HOLE:** 10

**MAX LOAD:** 8030 - 131

**INTERCHANGE:** Accuride 40008

**NEED THIS PART?**
*Contact our team to confirm stock & pricing on #67685.*

# #67655 FleetX 24.5x8.25 15% Tubeless Aluminium Wheel, Hub-Piloted, Dual-Mounting, Two Piece Flange Nut



PRODUCT REPRESENTATION

**MATERIAL: ALUMINIUM**
**WEIGHT: 54 LBS**

## KEY FEATURES

- **Tubeless**
  Tubeless design for a simplified, reliable air seal
- **Hub-Piloted**
  Hub-piloted centering for precise, secure wheel installation
- **Dual-Mounting**
  Dual-mount capable for steer, drive & trailer positions
- **Two Piece Flange Nut**
  Two-piece flange nut hardware for a durable clamp load

## TECHNICAL SPECIFICATION

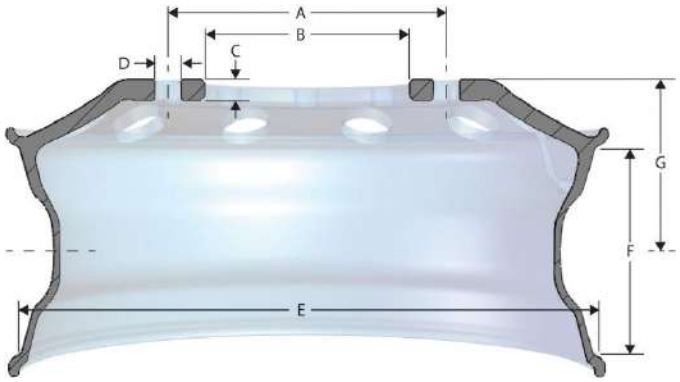


*Typical wheel shown — dimensional reference only*

| | | | |
|---|---|---|---|
| **A** | **BOLT CIRCLE**<br>285.75 mm | **B** | **CENTER BORE**<br>220.00 mm |
| **C** | **DISC THICKNESS**<br>0.866 | **D** | **BOLT HOLE SIZE**<br>26mm |
| **E** | **WHEEL DIAMETER**<br>24.5 | **F** | **WHEEL WIDTH**<br>8.25 |
| **G** | **OFFSET**<br>6.62 | | |

**BOLT HOLES:** 10

**HAND HOLE:** 10

**MAX LOAD:** 7400 - 131

**INTERCHANGE:** Accuride 41362

**NEED THIS PART?**
*Contact our team to confirm stock & pricing on #67655.*

# #67695

# FleetX 24.5x8.25 15% Tubeless Aluminium Wheel, Hub-Piloted, Dual-Mounting, Two Piece Flange Nut



PRODUCT REPRESENTATION

**MATERIAL: ALUMINIUM**
**WEIGHT: 66 LBS**

## KEY FEATURES

- **Tubeless**
  Tubeless design for a simplified, reliable air seal
- **Hub-Piloted**
  Hub-piloted centering for precise, secure wheel installation
- **Dual-Mounting**
  Dual-mount capable for steer, drive & trailer positions
- **Two Piece Flange Nut**
  Two-piece flange nut hardware for a durable clamp load

## TECHNICAL SPECIFICATION

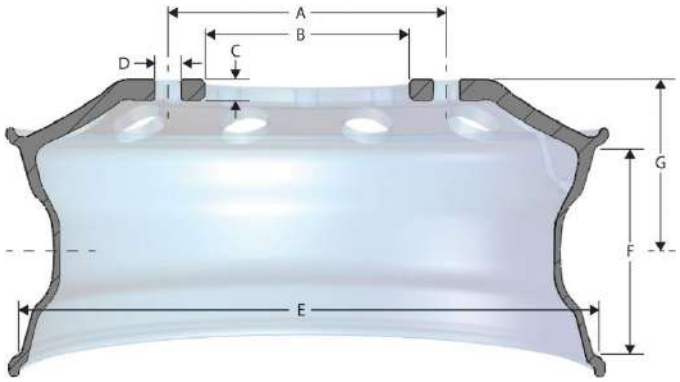


*Typical wheel shown — dimensional reference only*

| | | | |
|---|---|---|---|
| **A** | **BOLT CIRCLE**<br>285.75 mm | **B** | **CENTER BORE**<br>220.00 mm |
| **C** | **DISC THICKNESS**<br>0.950 | **D** | **BOLT HOLE SIZE**<br>26mm |
| **E** | **WHEEL DIAMETER**<br>24.5 | **F** | **WHEEL WIDTH**<br>8.25 |
| **G** | **OFFSET**<br>6.59 | | |

**BOLT HOLES:** 10

**HAND HOLE:** 10

**MAX LOAD:** 8030 - 131

**INTERCHANGE:** Accuride 40550

**NEED THIS PART?**
*Contact our team to confirm stock & pricing on #67695.*

# #67758 FleetX 22.5x9.00 15% Tubeless Aluminium Wheel, Hub-Piloted, Dual-Mounting, Two Piece Flange Nut



PRODUCT REPRESENTATION

**MATERIAL: ALUMINIUM**
**WEIGHT: 58 LBS**

## KEY FEATURES

- **Tubeless**
  Tubeless design for a simplified, reliable air seal
- **Hub-Piloted**
  Hub-piloted centering for precise, secure wheel installation
- **Dual-Mounting**
  Dual-mount capable for steer, drive & trailer positions
- **Two Piece Flange Nut**
  Two-piece flange nut hardware for a durable clamp load

## TECHNICAL SPECIFICATION

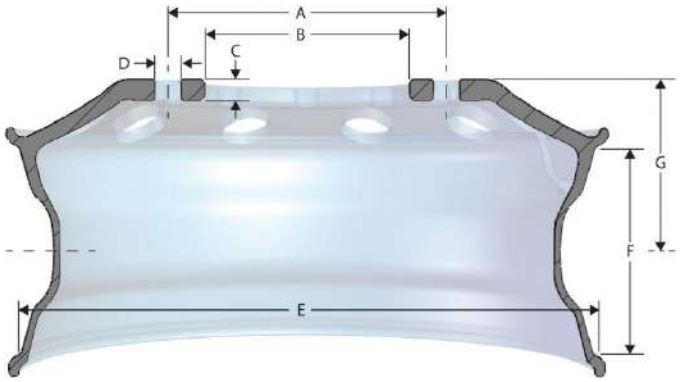


*Typical wheel shown — dimensional reference only*

| | | | |
|---|---|---|---|
| **A** | **BOLT CIRCLE**<br>285.75 mm | **B** | **CENTER BORE**<br>220.00 mm |
| **C** | **DISC THICKNESS**<br>0.980 | **D** | **BOLT HOLE SIZE**<br>26mm |
| **E** | **WHEEL DIAMETER**<br>22.5 | **F** | **WHEEL WIDTH**<br>9.00 |
| **G** | **OFFSET**<br>7.00 | | |

**BOLT HOLES:** 10

**HAND HOLE:** 10

**MAX LOAD:** 10000 - 130

**INTERCHANGE:** Accuride 41730

**NEED THIS PART?**
*Contact our team to confirm stock & pricing on #67758.*

# #67175 FleetX 22.5x11.75 15% Tubeless Aluminium Wheel, Hub-Piloted, Dual-Mounting, Two Piece Flange Nut



PRODUCT REPRESENTATION

**MATERIAL: ALUMINIUM**
**WEIGHT: 58 LBS**

## KEY FEATURES

- **Tubeless**
  Tubeless design for a simplified, reliable air seal
- **Hub-Piloted**
  Hub-piloted centering for precise, secure wheel installation
- **Dual-Mounting**
  Dual-mount capable for steer, drive & trailer positions
- **Two Piece Flange Nut**
  Two-piece flange nut hardware for a durable clamp load

## TECHNICAL SPECIFICATION

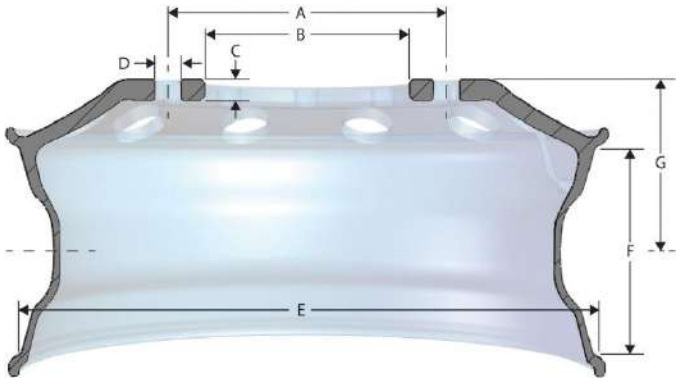


*Typical wheel shown — dimensional reference only*

| | | | |
|---|---|---|---|
| **A** | **BOLT CIRCLE**<br>335.00 mm | **B** | **CENTER BORE**<br>281.00 mm |
| **C** | **DISC THICKNESS**<br>0.120 | **D** | **BOLT HOLE SIZE**<br>26mm |
| **E** | **WHEEL DIAMETER**<br>22.5 | **F** | **WHEEL WIDTH**<br>11.75 |
| **G** | **OFFSET**<br>120.00 | | |

**BOLT HOLES:** 10

**HAND HOLE:** 10

**MAX LOAD:** 11000 - 138

**INTERCHANGE:** Accuride 40164

**NEED THIS PART?**
*Contact our team to confirm stock & pricing on #67175.*

# #67378 FleetX 22.5x12.25 15% Tubeless Aluminium Wheel, Hub-Piloted, Dual-Mounting, Two Piece Flange Nut



PRODUCT REPRESENTATION

**MATERIAL: ALUMINIUM**
**WEIGHT: 62 LBS**

## KEY FEATURES

- **Tubeless**
  Tubeless design for a simplified, reliable air seal
- **Hub-Piloted**
  Hub-piloted centering for precise, secure wheel installation
- **Dual-Mounting**
  Dual-mount capable for steer, drive & trailer positions
- **Two Piece Flange Nut**
  Two-piece flange nut hardware for a durable clamp load

## TECHNICAL SPECIFICATION

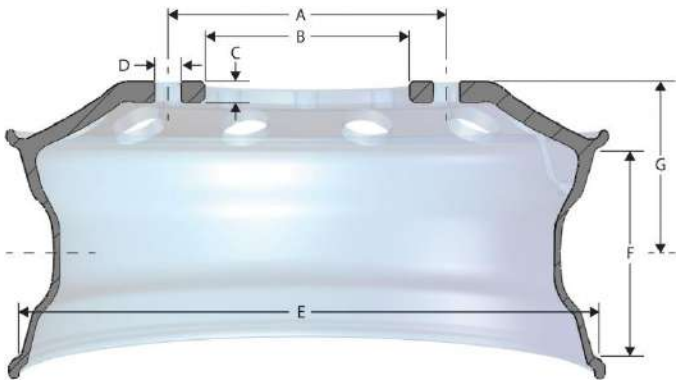


*Typical wheel shown — dimensional reference only*

| | | | |
|---|---|---|---|
| **A** | **BOLT CIRCLE**<br>285.75 mm | **B** | **CENTER BORE**<br>220.00 mm |
| **C** | **DISC THICKNESS**<br>0.120 | **D** | **BOLT HOLE SIZE**<br>26mm |
| **E** | **WHEEL DIAMETER**<br>22.5 | **F** | **WHEEL WIDTH**<br>12.25 |
| **G** | **OFFSET**<br>0.56 | | |

**BOLT HOLES:** 10

**HAND HOLE:** 10

**MAX LOAD:** 11400 - 120

**INTERCHANGE:** Accuride 29378

**NEED THIS PART?**
*Contact our team to confirm stock & pricing on #67378.*

# #67503 FleetX 17.5x6.75 HC Tubeless Aluminium Wheel, Hub-Piloted, Dual-Mounting, Two Piece Flange Nut



PRODUCT REPRESENTATION

**MATERIAL: ALUMINIUM**

TUBELESS · HUB-PILOTED · DUAL-MOUNT

## KEY FEATURES

- **Tubeless**
  Tubeless design for a simplified, reliable air seal
- **Hub-Piloted**
  Hub-piloted centering for precise, secure wheel installation
- **Dual-Mounting**
  Dual-mount capable for steer, drive & trailer positions
- **Two Piece Flange Nut**
  Two-piece flange nut hardware for a durable clamp load

## TECHNICAL SPECIFICATION

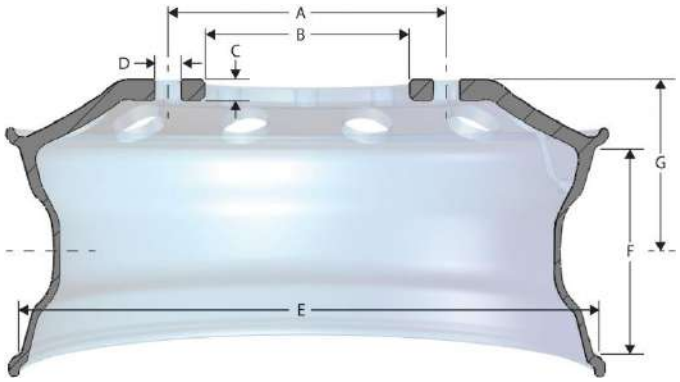


*Typical wheel shown — dimensional reference only*

| | | | |
|---|---|---|---|
| **A** | **BOLT CIRCLE** 275.00 mm | **B** | **CENTER BORE** 221.00 mm |
| **C** | **DISC THICKNESS** 0.827 | **D** | **BOLT HOLE SIZE** 26mm |
| **E** | **WHEEL DIAMETER** 17.5 | **F** | **WHEEL WIDTH** 6.75 HC |
| **G** | **OFFSET** 5.55 | | |

**BOLT HOLES:** 8

**HAND HOLE:** 8

**MAX LOAD:** 5515 - 142

**INTERCHANGE:** Accuride 40171

**NEED THIS PART?**
*Contact our team to confirm stock & pricing on #67503.*

HEAVY-DUTY WHEEL SYSTEMS

# FLEETX®

PRECISION WHEEL-END PRODUCTS FOR HEAVY-DUTY FLEETS



## TECHLINK INDUSTRIES CORPORATION


www.fleetxparts.com

sales@fleetxparts.com

+1-905-737-4060


*© 2026 Techlink Industries Corporation. FleetX® is a registered trademark.*