FLEETX®

HEAVY-DUTY

LANDING GEAR

PRODUCT CATALOGUE



STRENGTH • DURABILITY • EASE OF LIFT

TECHLINK INDUSTRIES CORPORATION

FLEETX WHEEL-END SYSTEMS

Inside This Catalogue

Engineered for the demands of North American fleets, dealers, and service shops, the FleetX landing gear line is built to meet and exceed national impact standards while delivering dependable, low-maintenance performance in the field. The following pages detail design features, durability construction, full dimensional specifications, and repair-kit part numbers for every model in the range.

FLXLG133XH	High-Performance Universal Landing Gear	03
FLXLG133XHD	Heavy-Duty Universal Landing Gear	06
FLXLG133NA	Compact Built-In Gear Landing Gear	09
FLXLG130NA	Compact Built-In Gear Landing Gear	12
FLXLG130F	Standard-Duty Universal Landing Gear	15
Ordering Code	How to build a complete FleetX landing gear part number	18

FLXLG133XH

HIGH-PERFORMANCE UNIVERSAL LANDING GEAR

FleetX Landing Gear that Exceeds the Standards for Strength, Durability, and Ease of Lift



MODEL FLXLG133XH — ASSEMBLY VIEW

DESIGN FEATURES

- ✓ Meets and exceeds National Standard GB/T 26777-2023 impact requirement
- ✓ Approved by DOT Certification
- ✓ Replaceable cushion foot for easy repair, adapts to varied and demanding road conditions
- ✓ Gearbox completely filled with low-temperature grease for reliable cold-weather performance
- ✓ Special seal structure engineered with the latest technology for a longer service life
- ✓ Shaft treated with electrophoretic paint for superior corrosion resistance

280 mm – 530 mm	28T/Pair	80T/Pair	DOT / GB-T 26777
TRAVEL RANGE	CAPACITY	STATIC LOAD	CERTIFICATION

BUILT FOR NORTH AMERICAN FLEETS, DEALERS & SERVICE SHOPS

DURABILITY FOR ROBUST PERFORMANCE

Every FleetX gearbox is engineered component-by-component for long service life in demanding field conditions — from the sealed cover down to the load-bearing screw nut.

POWDERED METAL SHAFT BUSHING

Mutually interconnected porosity inside the powder-metallurgy material allows the product to retain lubricating oil for excellent wear resistance, self-lubrication, and rust protection.

DOUBLE LEAD ELEVATING SCREW NUT

QT600-3 pearlite heat-resisting steel with medium-to-high strength, toughness and plasticity, good wear resistance and shock absorption. Square structure coincides with the landing gear inside tube for uniformly distributed load.

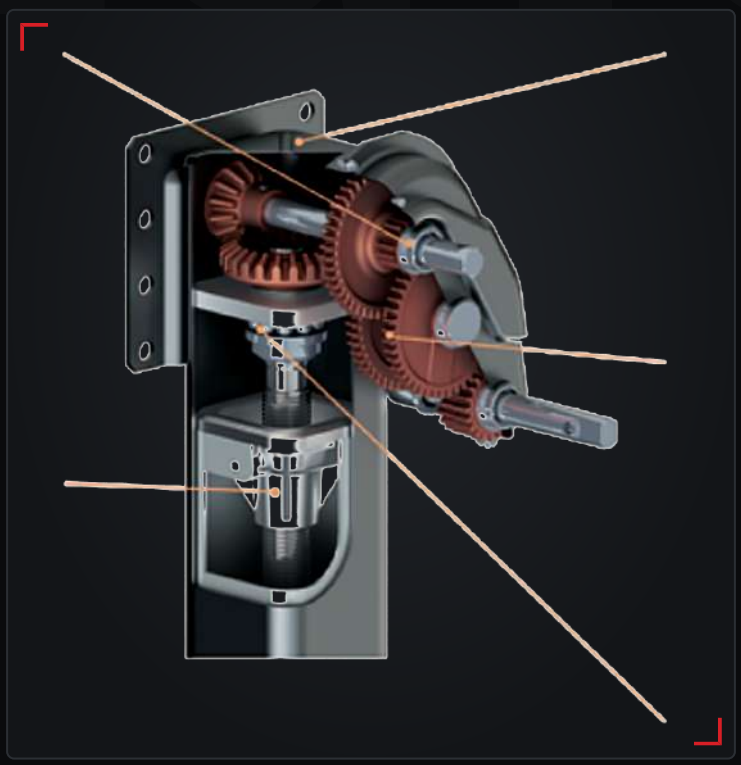

MODEL FLXLG133XH — GEARBOX CUTAWAY

COVER

The cover is completely sealed to keep moisture and road contaminants out, protecting internal components.

GEARS

20CrMnTi gear, hardness 57-60 HRC, carburizing treatment for wear resistance and high impact toughness.

HEAVY DUTY THRUST BEARING

Meets and exceeds National Standard GB/T 26777-2023 impact requirement.

FLXLG133XH

HIGH-PERFORMANCE UNIVERSAL LANDING GEAR

SPECIFICATION PARAMETERS

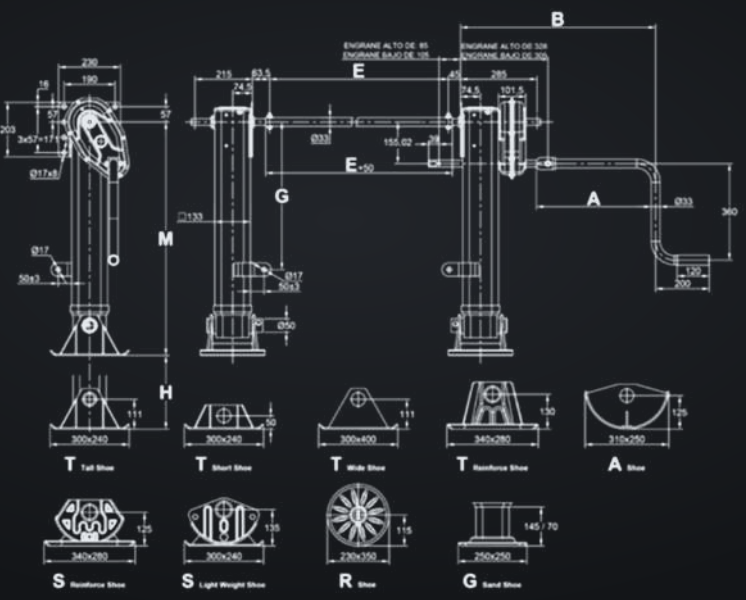

MODEL	SHOE	H (MM/IN)	M (MM/IN)	G (MM/IN)	HIGH GEAR	LOW GEAR	TRAVEL MAX	CAPACITY	STATIC LOAD
FLXLG133XH/280	T	280 / 11.02"	670 / 26.38"	400 / 15.75"	9.95 mm/r	0.63 mm/r	280 mm / 11.02"	28T/Pair	80T/Pair
FLXLG133XH/380	T	380 / 14.96"	770 / 30.32"	450 / 17.72"	9.95 mm/r	0.63 mm/r	380 mm / 14.96"	28T/Pair	80T/Pair
FLXLG133XH/480	T	480 / 18.90"	870 / 34.25"	550 / 21.65"	9.95 mm/r	0.63 mm/r	480 mm / 18.90"	28T/Pair	80T/Pair
FLXLG133XH/530	T	530 / 20.87"	920 / 36.22"	570 / 22.44"	9.95 mm/r	0.63 mm/r	530 mm / 20.87"	28T/Pair	80T/Pair

REPAIR KITS — Part Numbers

KIT	PART NUMBER
Gear Box Repair Kit	FLX-GBRK-67133
Bevel & Pinion Repair Kit	FLX-BPRK-67132
Spur & Idler Repair Kit	FLX-SIRK-67131

FLXLG133XHD

HEAVY-DUTY UNIVERSAL LANDING GEAR

FleetX Landing Gear that Exceeds the Standards for **Strength**, **Durability**, and Ease of Lift



MODEL FLXLG133XHD — ASSEMBLY VIEW

DESIGN FEATURES

- ✓ Meets and exceeds National Standard GB/T 26777-2023 impact requirement
- ✓ Approved by DOT Certification
- ✓ Replaceable cushion foot for easy repair, adapts to varied and demanding road conditions
- ✓ Gearbox completely filled with low-temperature grease for reliable cold-weather performance
- ✓ Special seal structure engineered with the latest technology for a longer service life
- ✓ Shaft treated with electrophoretic paint for superior corrosion resistance

280 mm – 530 mm	28T/Pair	80T/Pair	DOT / GB-T 26777
TRAVEL RANGE	CAPACITY	STATIC LOAD	CERTIFICATION

BUILT FOR NORTH AMERICAN FLEETS, DEALERS & SERVICE SHOPS

DURABILITY FOR ROBUST PERFORMANCE

Every FleetX gearbox is engineered component-by-component for long service life in demanding field conditions — from the sealed cover down to the load-bearing screw nut.

POWDERED METAL SHAFT BUSHING

Mutually interconnected porosity inside the powder-metallurgy material allows the product to retain lubricating oil for excellent wear resistance, self-lubrication, and rust protection.

DOUBLE LEAD ELEVATING SCREW NUT

QT600-3 pearlite heat-resisting steel with medium-to-high strength, toughness and plasticity, good wear resistance and shock absorption. Square structure coincides with the landing gear inside tube for uniformly distributed load.

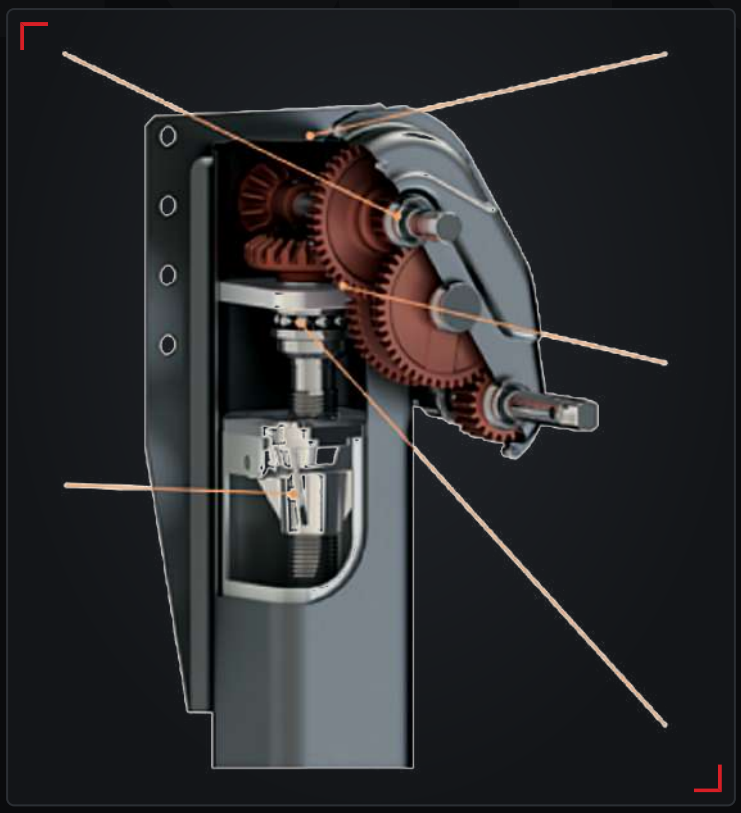

MODEL FLXLG133XHD — GEARBOX CUTAWAY

COVER

The cover is completely sealed to keep moisture and road contaminants out, protecting internal components.

GEARS

20CrMnTi gear, hardness 57-60 HRC, carburizing treatment for wear resistance and high impact toughness.

HEAVY DUTY THRUST BEARING

Meets and exceeds National Standard GB/T 26777-2023 impact requirement.

FLXLG133XHD

HEAVY-DUTY UNIVERSAL LANDING GEAR

SPECIFICATION PARAMETERS

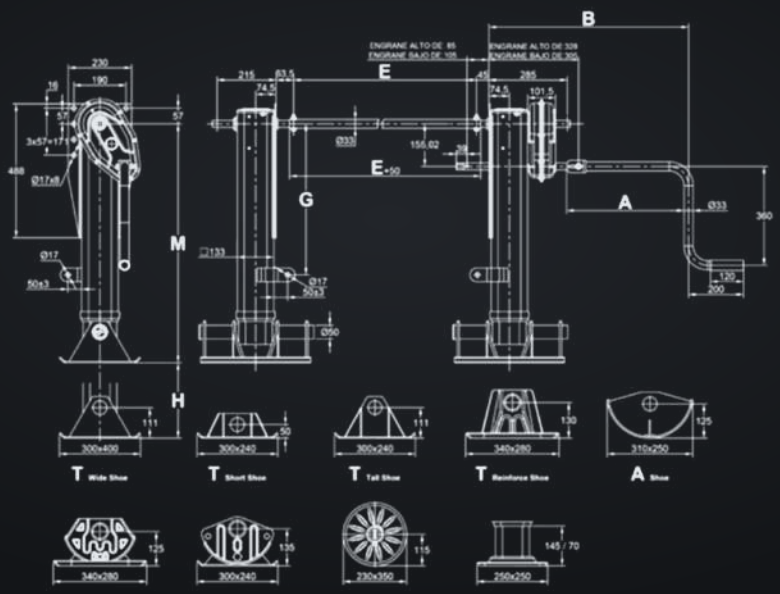

MODEL	SHOE	H (MM/IN)	M (MM/IN)	G (MM/IN)	HIGH GEAR	LOW GEAR	TRAVEL MAX	CAPACITY	STATIC LOAD
FLXLG133XHD/280	T	280 / 11.02"	670 / 26.38"	400 / 15.75"	9.95 mm/r	0.63 mm/r	280 mm / 11.02"	28T/Pair	80T/Pair
FLXLG133XHD/380	T	380 / 14.96"	770 / 30.32"	450 / 17.72"	9.95 mm/r	0.63 mm/r	380 mm / 14.96"	28T/Pair	80T/Pair
FLXLG133XHD/480	T	480 / 18.90"	870 / 34.25"	550 / 21.65"	9.95 mm/r	0.63 mm/r	480 mm / 18.90"	28T/Pair	80T/Pair
FLXLG133XHD/530	T	530 / 20.87"	920 / 36.22"	570 / 22.44"	9.95 mm/r	0.63 mm/r	530 mm / 20.87"	28T/Pair	80T/Pair

REPAIR KITS — Part Numbers

KIT	PART NUMBER
Gear Box Repair Kit	FLX-GBRK-67133
Bevel & Pinion Repair Kit	FLX-BPRK-67132
Spur & Idler Repair Kit	FLX-SIRK-67131

FLXLG133NA

COMPACT BUILT-IN GEAR LANDING GEAR

FleetX Landing Gear that Exceeds the Standards for **Strength**, **Durability**, and Ease of Lift



MODEL FLXLG133NA — ASSEMBLY VIEW

DESIGN FEATURES

- ✓ Meets and exceeds National Standard GB/T 26777-2023 impact requirement
- ✓ Approved by DOT Certification
- ✓ A variety of mounting heights and backplates available
- ✓ Built-in gear, compact structure
- ✓ Satisfies tractor and trailer swap transport requirements
- ✓ Special seal structure engineered with the latest technology for a longer service life
- ✓ Shaft treated with electrophoretic paint for superior corrosion resistance

280 mm – 530 mm	28T/Pair	80T/Pair	DOT / GB-T 26777
TRAVEL RANGE	CAPACITY	STATIC LOAD	CERTIFICATION

BUILT FOR NORTH AMERICAN FLEETS, DEALERS & SERVICE SHOPS

DURABILITY FOR ROBUST PERFORMANCE

Every FleetX gearbox is engineered component-by-component for long service life in demanding field conditions — from the sealed cover down to the load-bearing screw nut.

POWDERED METAL SHAFT BUSHING

Mutually interconnected porosity inside the powder-metallurgy material allows the product to retain lubricating oil for excellent wear resistance, self-lubrication, and rust protection.

DOUBLE LEAD ELEVATING SCREW NUT

QT600-3 pearlite heat-resisting steel with medium-to-high strength, toughness and plasticity, good wear resistance and shock absorption. Square structure coincides with the landing gear inside tube for uniformly distributed load.

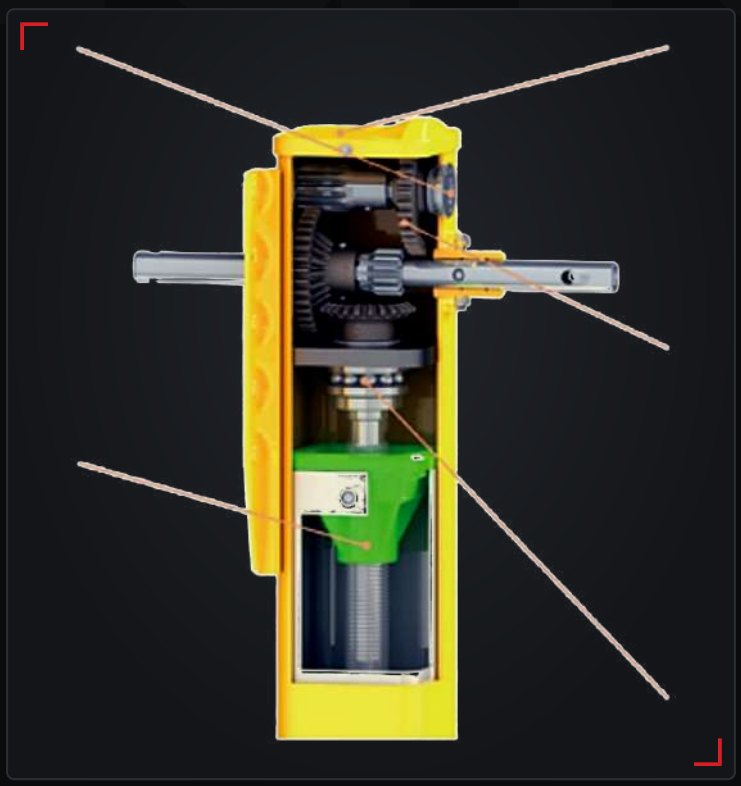

MODEL FLXLG133NA — GEARBOX CUTAWAY

COVER

The cover is completely sealed to keep moisture and road contaminants out, protecting internal components.

GEARS

20CrMnTi gear, hardness 57-60 HRC, carburizing treatment for wear resistance and high impact toughness.

HEAVY DUTY THRUST BEARING

Meets and exceeds National Standard GB/T 26777-2023 impact requirement.

FLXLG133NA

COMPACT BUILT-IN GEAR LANDING GEAR

SPECIFICATION PARAMETERS

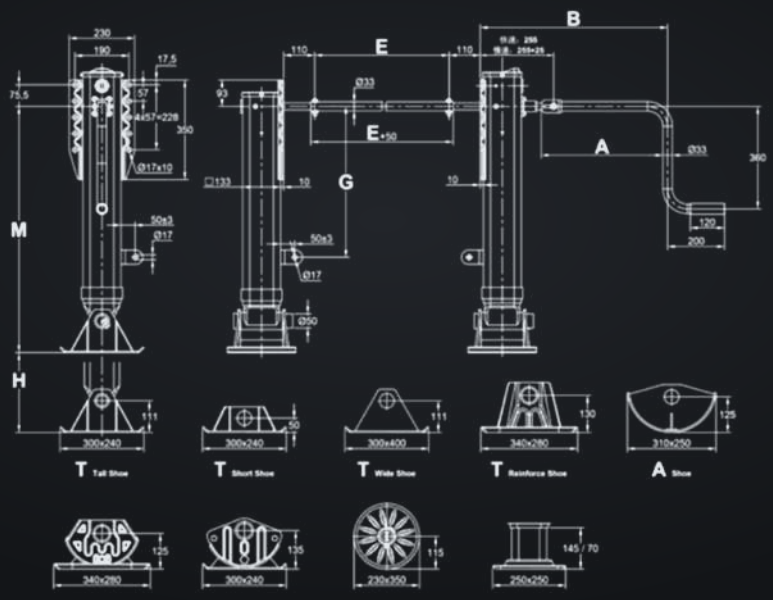

MODEL	SHOE	H (MM/IN)	M (MM/IN)	G (MM/IN)	HIGH GEAR	LOW GEAR	TRAVEL MAX	CAPACITY	STATIC LOAD
FLXLG133NA/280	T	280 / 11.02"	665 / 26.18"	380 / 14.96"	7.21 mm/r	0.66 mm/r	280 mm / 11.02"	28T/Pair	80T/Pair
FLXLG133NA/380	T	380 / 14.96"	765 / 30.12"	430 / 16.93"	7.21 mm/r	0.66 mm/r	380 mm / 14.96"	28T/Pair	80T/Pair
FLXLG133NA/480	T	480 / 18.90"	865 / 34.05"	530 / 20.87"	7.21 mm/r	0.66 mm/r	480 mm / 18.90"	28T/Pair	80T/Pair
FLXLG133NA/530	T	530 / 20.87"	915 / 36.02"	550 / 21.65"	7.21 mm/r	0.66 mm/r	530 mm / 20.87"	28T/Pair	80T/Pair

REPAIR KITS — Part Numbers

KIT	PART NUMBER
Gear Box Repair Kit	FLX-GBRK-67133-NA
Bevel & Pinion Repair Kit	FLX-BPRK-67132-NA
Spur & Idler Repair Kit	FLX-SIRK-67131-NA

FLXLG130NA

COMPACT BUILT-IN GEAR LANDING GEAR

FleetX Landing Gear that Exceeds the Standards for **Strength**, **Durability**, and Ease of Lift



MODEL FLXLG130NA — ASSEMBLY VIEW

DESIGN FEATURES

- ✓ Meets and exceeds National Standard GB/T 26777-2023 impact requirement
- ✓ Approved by DOT Certification
- ✓ A variety of mounting heights and backplates available
- ✓ Built-in gear, compact structure
- ✓ Satisfies tractor and trailer swap transport requirements
- ✓ Special seal structure engineered with the latest technology for a longer service life
- ✓ Shaft treated with electrophoretic paint for superior corrosion resistance

280 mm – 530 mm	28T/Pair	80T/Pair	DOT / GB-T 26777
TRAVEL RANGE	CAPACITY	STATIC LOAD	CERTIFICATION

BUILT FOR NORTH AMERICAN FLEETS, DEALERS & SERVICE SHOPS

DURABILITY FOR ROBUST PERFORMANCE

Every FleetX gearbox is engineered component-by-component for long service life in demanding field conditions — from the sealed cover down to the load-bearing screw nut.

POWDERED METAL SHAFT BUSHING

Mutually interconnected porosity inside the powder-metallurgy material allows the product to retain lubricating oil for excellent wear resistance, self-lubrication, and rust protection.

DOUBLE LEAD ELEVATING SCREW NUT

QT600-3 pearlite heat-resisting steel with medium-to-high strength, toughness and plasticity, good wear resistance and shock absorption. Square structure coincides with the landing gear inside tube for uniformly distributed load.

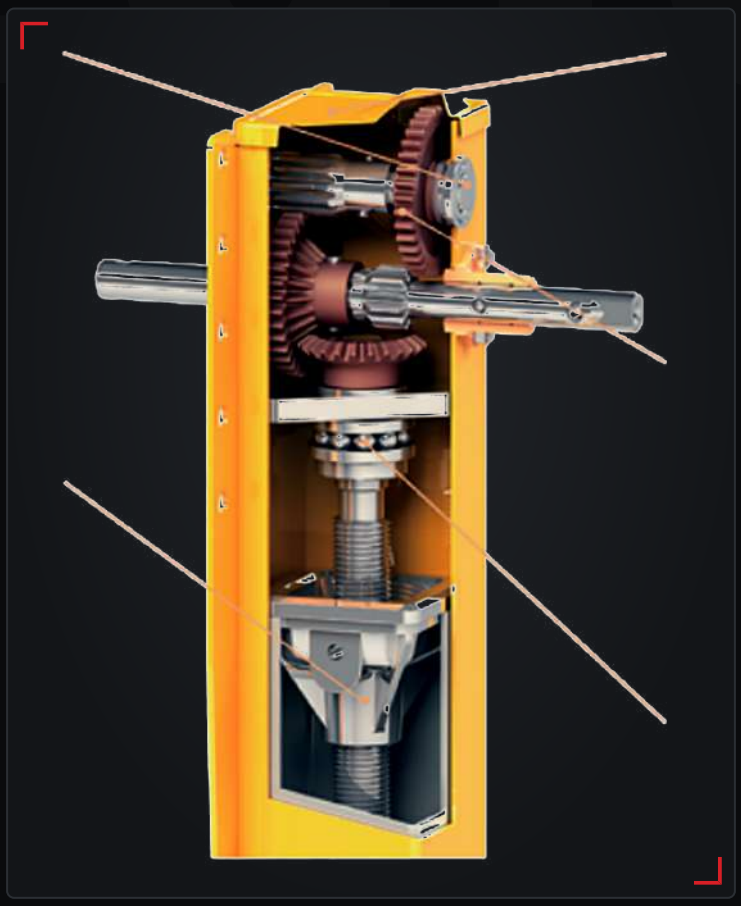

MODEL FLXLG130NA — GEARBOX CUTAWAY

COVER

The cover is completely sealed to keep moisture and road contaminants out, protecting internal components.

GEARS

20CrMnTi gear, hardness 57-60 HRC, carburizing treatment for wear resistance and high impact toughness.

HEAVY DUTY THRUST BEARING

Meets and exceeds National Standard GB/T 26777-2023 impact requirement.

FLXLG130NA

COMPACT BUILT-IN GEAR LANDING GEAR

SPECIFICATION PARAMETERS

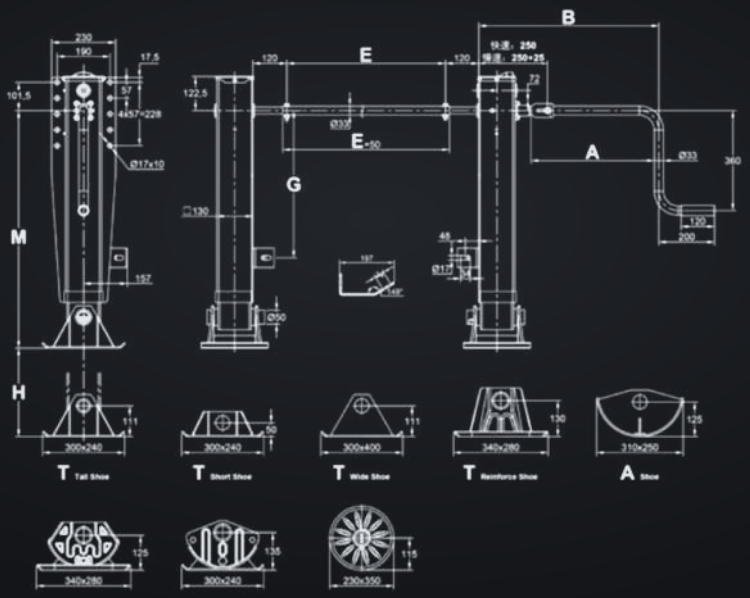

MODEL	SHOE	H (MM/IN)	M (MM/IN)	G (MM/IN)	HIGH GEAR	LOW GEAR	TRAVEL MAX	CAPACITY	STATIC LOAD
FLXLG130NA/280	T	280 / 11.02"	665 / 26.18"	380 / 14.96"	7.21 mm/r	0.66 mm/r	280 mm / 11.02"	28T/Pair	80T/Pair
FLXLG130NA/380	T	380 / 14.96"	765 / 30.12"	430 / 16.93"	7.21 mm/r	0.66 mm/r	380 mm / 14.96"	28T/Pair	80T/Pair
FLXLG130NA/480	T	480 / 18.90"	865 / 34.05"	530 / 20.87"	7.21 mm/r	0.66 mm/r	480 mm / 18.90"	28T/Pair	80T/Pair
FLXLG130NA/530	T	530 / 20.87"	905 / 35.63"	550 / 21.65"	7.21 mm/r	0.66 mm/r	530 mm / 20.87"	28T/Pair	80T/Pair

REPAIR KITS — Part Numbers

KIT	PART NUMBER
Gear Box Repair Kit	FLX-GBRK-67130-NA
Bevel & Pinion Repair Kit	FLX-BPRK-67130-NA
Spur & Idler Repair Kit	FLX-SIRK-67130-NA

FLXLG130F

STANDARD-DUTY UNIVERSAL LANDING GEAR

FleetX Landing Gear that Exceeds the Standards for **Strength**, **Durability**, and Ease of Lift



MODEL FLXLG130F — ASSEMBLY VIEW

DESIGN FEATURES

- ✓ Meets and exceeds National Standard GB/T 26777-2023 impact requirement
- ✓ Approved by DOT Certification
- ✓ Replaceable cushion foot for easy repair, adapts to varied and demanding road conditions
- ✓ Gearbox completely filled with low-temperature grease for reliable cold-weather performance
- ✓ Gear material 20CrMnTi for wear resistance and high impact toughness
- ✓ Special seal structure engineered with the latest technology for a longer service life
- ✓ Shaft treated with electrophoretic paint for superior corrosion resistance

280 mm – 530 mm	28T/Pair	80T/Pair	DOT / GB-T 26777
TRAVEL RANGE	CAPACITY	STATIC LOAD	CERTIFICATION

BUILT FOR NORTH AMERICAN FLEETS, DEALERS & SERVICE SHOPS

DURABILITY FOR ROBUST PERFORMANCE

Every FleetX gearbox is engineered component-by-component for long service life in demanding field conditions — from the sealed cover down to the load-bearing screw nut.

POWDERED METAL SHAFT BUSHING

Mutually interconnected porosity inside the powder-metallurgy material allows the product to retain lubricating oil for excellent wear resistance, self-lubrication, and rust protection.

DOUBLE LEAD ELEVATING SCREW NUT

QT600-3 pearlite heat-resisting steel with medium-to-high strength, toughness and plasticity, good wear resistance and shock absorption. Square structure coincides with the landing gear inside tube for uniformly distributed load.

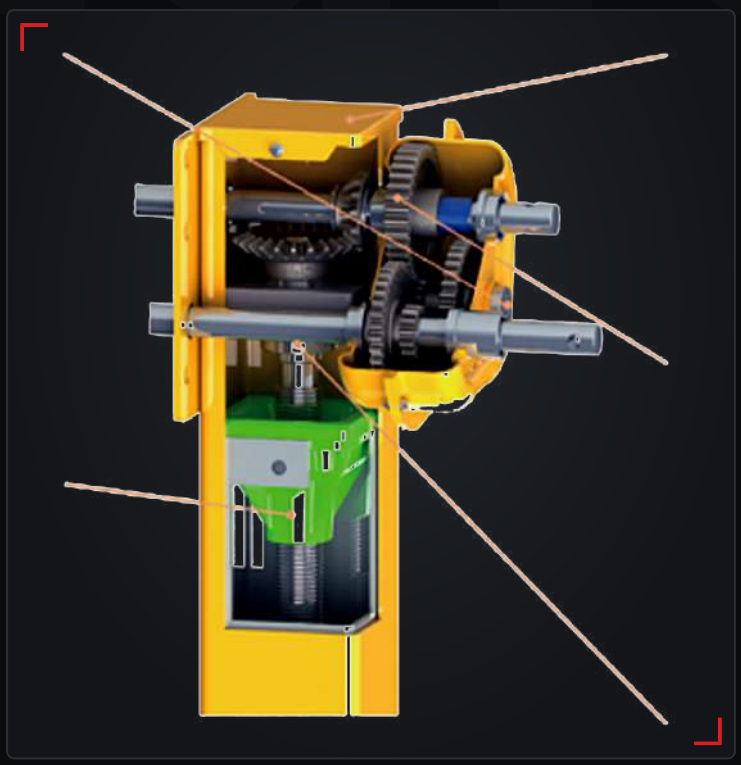

MODEL FLXLG130F — GEARBOX CUTAWAY

COVER

The cover is completely sealed to keep moisture and road contaminants out, protecting internal components.

GEARS

20CrMnTi gear, hardness 57-60 HRC, carburizing treatment for wear resistance and high impact toughness.

HEAVY DUTY THRUST BEARING

Meets and exceeds National Standard GB/T 26777-2023 impact requirement.

FLXLG130F

STANDARD-DUTY UNIVERSAL LANDING GEAR

SPECIFICATION PARAMETERS

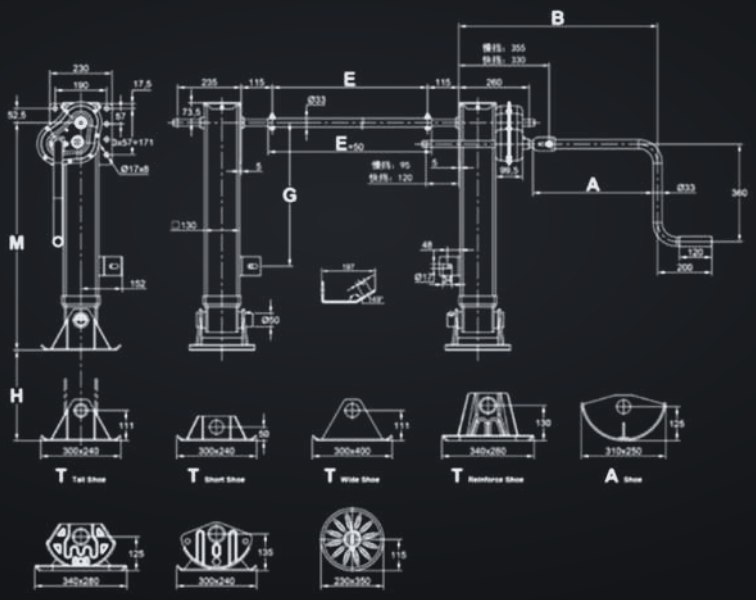

MODEL	SHOE	H (MM/IN)	M (MM/IN)	G (MM/IN)	HIGH GEAR	LOW GEAR	TRAVEL MAX	CAPACITY	STATIC LOAD
FLXLG130F/280	T	280 / 11.02"	640 / 25.20"	380 / 14.96"	5.66 mm/r	0.81 mm/r	280 mm / 11.02"	28T/Pair	80T/Pair
FLXLG130F/380	T	380 / 14.96"	740 / 29.13"	430 / 16.93"	5.66 mm/r	0.81 mm/r	380 mm / 14.96"	28T/Pair	80T/Pair
FLXLG130F/480	T	480 / 18.90"	840 / 33.07"	530 / 20.87"	5.66 mm/r	0.81 mm/r	480 mm / 18.90"	28T/Pair	80T/Pair
FLXLG130F/530	T	530 / 20.87"	890 / 35.04"	550 / 21.65"	5.66 mm/r	0.81 mm/r	530 mm / 20.87"	28T/Pair	80T/Pair

REPAIR KITS — Part Numbers

KIT	PART NUMBER
Gear Box Repair Kit	FLX-GBRK-67130-F
Bevel & Pinion Repair Kit	FLX-BPRK-67130-F
Spur & Idler Repair Kit	FLX-SIRK-67130-F

Ordering Code

HOW TO BUILD A COMPLETE FLEETX PART NUMBER

FleetX landing gear part numbers are configured from four code groups — Travel Distance, Mounting Style, Axle Type, and Foot Type. Combine the model prefix with the codes below to specify the exact configuration required for your application.

TRAVEL

CODE	DESCRIPTION
1	280 / 11.02"
2	380 / 14.96"
3	480 / 18.90"
4	530 / 20.87"
SP	Special

MOUNTING

CODE	DESCRIPTION
A	Universal
B	Inside
C	Outside
D	I-Beam
SP	Special

AXLE TYPE

CODE	DESCRIPTION
0	No Axle
1	Standard
2	Solid Axle
SP	Special

FOOT TYPE

CODE	DESCRIPTION	DIMENSIONS (H-W-L)
T1	Short Shoe	1.97" x 9.45" x 11.81" (50 × 240 × 300 mm)
T2	Tall Shoe	4.37" x 9.45" x 11.81" (111 × 240 × 300 mm)
T3	Wide Shoe	4.37" x 15.75" x 11.81" (111 × 400 × 300 mm)
T4	Reinforced	5.19" x 11.02" x 13.39" (130 × 280 × 340 mm)
A5	Special	—

EXAMPLE

FLXLG133XH / 380 – A – 1 – T2

Model FLXLG133XH, 380 mm travel, Universal mount, Standard axle, Tall Shoe foot



TECHLINK INDUSTRIES CORPORATION

HEAVY-DUTY TRUCK & TRAILER WHEEL-END PARTS

www.fleetxparts.com sales@fleetxparts.com +1-905-737-4060