FLEETX®

— PREMIUM HEAVY DUTY PARTS —

AXLES & SUSPENSIONS

PRODUCT CATALOGUE

- BUILT FOR STRENGTH. ENGINEERED TO LAST.
- PRECISION ENGINEERED FOR PERFECT FIT.
- OEM QUALITY. TRUSTED PERFORMANCE.



Techlink
Industries Corporation

AMERICAN DISC BRAKE AXLE

DESCRIPTION

- High wear-resistant brake disc: non-cracking, super wear-resistant and high temperature resistance;
- High-performance lining: high-performance imported brake lining, stable braking, large friction and good thermal stability;
- High-precision bearing: well-known brand high-precision bearing, super-strong bearing capacity, low temperature rise and long service life;
- High reliability brake: Hangwan double push rod brake, braking performance is reliable and safer;
- High load bearing tube: Baosteel new material shaft tube, bearing position adopts high-frequency quenching, with high precision, strong bearing capacity, light weight and without shaft;
- Long-life grease: Mobil XHP222 grease, operating temperature range -40°C ~ +180°C, greatly improves bearing life and reduces cost.

TECHNICAL PARAMETERS

CAP (T)	BRAKE DISC	BRAKE AREA	AXLE TUBE	STUD	PC.D D1	SEAM D2	TRACK	BEARING
13	D430x45	196cm	Square 127	10-M22x1.5	335	280.8	1840	HM518445/10
13	D430x45	196cm	Round 127	10-M22x1.5	335	280.8	1840	HM518445/10
13	Ø430x45	196cm²	Square 150	10-M22x1.5	335	220.8	1840	HM518445/10

Bearing pair: HM518445/10 + HM518445/10



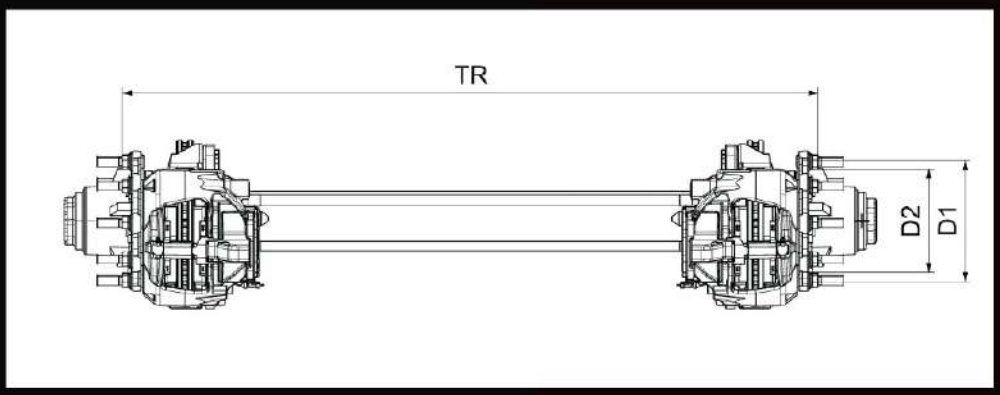

HEAVY-DUTY AMERICAN DRUM BRAKE AXLE

DESCRIPTION

- Brand-new braking system: the braking is sensitive and efficient, the braking capacity is greatly improved by 30%, and it has the advantages of stable mechanical performance and thermal performance, low peak stress and low noise;
- Long-life oil seal: high-temperature resistant and long-life oil seal can effectively prevent dust and moisture from entering the wheel cavity;
- High-precision hub: high-precision hub unit ensures accurate the pre-assembly of bearing and uniform bearing stress.
- When the hub is disassembled, the circlip keeps the oil seal together with the bearing in the hub to ensure the integrity and cleanliness of the hub assembly;
- Convenient assembly and disassembly: the hub system is convenient to assemble and disassemble, and the brake pad can be replaced easily.

TECHNICAL PARAMETERS

CAP (T)	BRAKE	BRAKE CHAMBER	AXLE TUBE	STUD	PC.D D1	SEAM D2	TRACK	BEARING
13	420x180	390	Square 127	10-M22x1.5	335	280.8	1840	HM518445/10
13	420x180	390	Round 127	10-M22x1.5	335	280.8	1840	HM518445/10
13	420x180	390	Square 150	10-M22x1.5	335	220.8	1840	HM518445/10
14	420x220	340	Square 150	10-M22x1.5	335	280.8	1840	HM518445/10
16	420x220	350	Square 150	10-M22x1.5	335	280.8	1850	HM518445/10, 220149
20	420x220	345	Square 150	10-M24x1.5	335	280.8	1850	HM518445/10, 32222
25	420x220	345	Square 150	10-M24x1.5	335	280.8	1850	32222, 32222



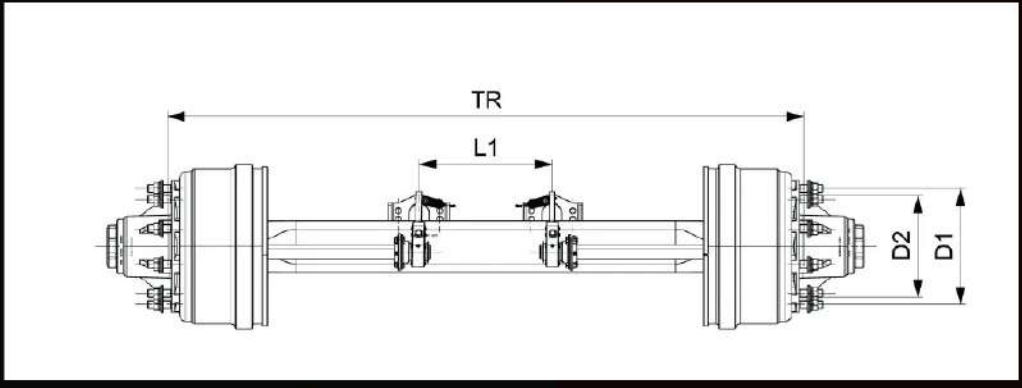

MECHANICAL SUSPENSION

DESCRIPTION

- Lightweight design, easy installation and convenient maintenance;
- Select high-strength materials, with strong bearing capacity, good wear resistance, high stability, and long service life;
- The adjustment of the axle wheelbase is convenient and accurate, and prevent tire wearing;
- After rigorous bench test and loading road test.





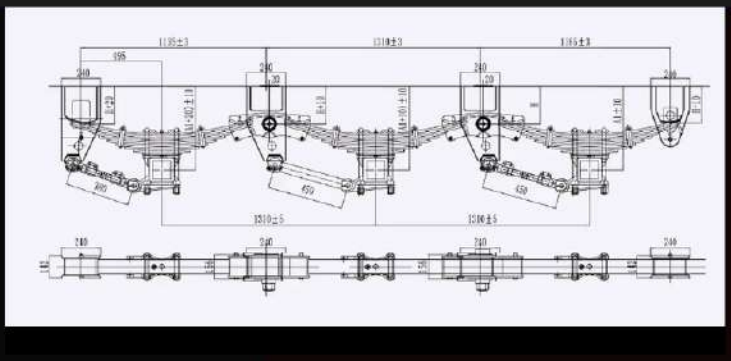

MECHANICAL SUSPENSION (OVER SLUNG)

SIDE PLATE (mm)	HEIGHT H (mm)	INSTALL A1	CENTRAL PIN	LOWER PARTS	WHEELBASE L2	LOADING CAP.
4	110-320	380-590	50, 60	One-piece	1310	10000×3
6	110-320	380-590	60, 70	One-piece / Split	Customized	13000×3
8	110-320	380-590	60, 70	One-piece / Split	—	16000×3
10	110-320	380-590	70	Welding	—	18000×3

MECHANICAL SUSPENSION (UNDER SLUNG)

SIDE PLATE (mm)	HEIGHT H (mm)	INSTALL A1	CENTRAL PIN	LOWER PARTS	WHEELBASE L2	LOADING CAP.
6	230-320	190-280	60, 70	Welding	1310 / Custom	13000×3
8	230-320	190-280	60, 70	Welding	—	16000×3
10	230-320	190-280	70	Welding	—	18000×3

13T AIR SUSPENSION

FEATURES

- Air suspension can add lifting device;
- Reduce tire wear after lifting the axle;
- Two-axle driving is more fuel-saving than three-axle driving;
- The lifting also extends the maintenance interval, making it more economical and cost-effective.



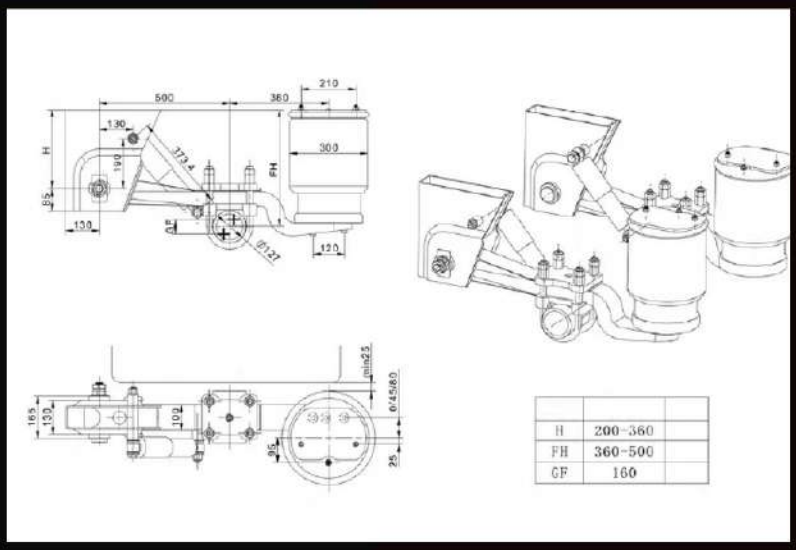

TECHNICAL PARAMETERS — 13T AIR SUSPENSION PRODUCT

CAP (T)	TYPE	INSTALL FH	SUPPORT ST	BRAKE MODEL	BRAKE	CHAMBER L4	TRACK L2
13T	Drum	380-530	220-340	Ø420×180	Drum Brake	230	1840
13T	Drum	—	—	—	—	230	1840
13T	Disc	—	—	—	Disc Brake	—	1840
13T	Disc	—	—	—	—	—	1840

FLEETX®

PREMIUM HEAVY DUTY PARTS



Techlink Industries Corporation

W www.fleetxparts.com

@ sales@fleetxparts.com

T +1-905-737-4060